SYMBOL DEFINITION		
A DIMENSION WITHOUT AN INSPECTION REPORT SYMBOL (3) DOES NOT REQUIRE INSPECTION. IT MAY BE CONTROLLED ON THE INDIVIDUAL COMPONENT DRAWING.	TOTAL NO OF INSPECTIONS REQUIRED	3
	LAST NO. USED	3

MISSING SYMBOLS
NO MISSING SYMBOL NUMBER

DWG STATUS DATE	STG	REV	N/P	CHG	ZONE	REVISION HISTORY	AUTH	DR	APVD 1	APVD 2
28MY16	R	01	-	-	-	INITIAL RELEASE		BHC	JJY	PJH

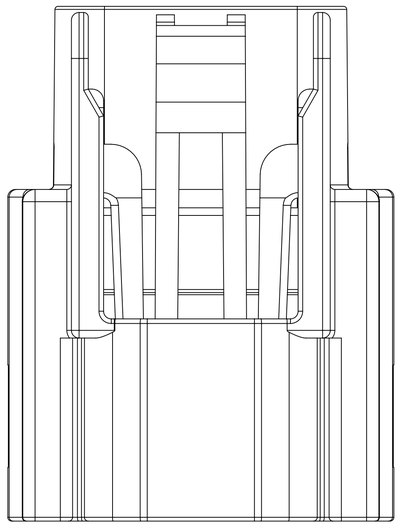

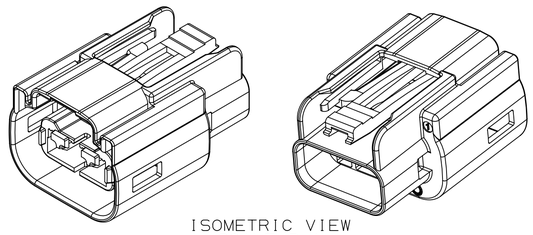

ISOMETRIC VIEW
SCALE 2:1

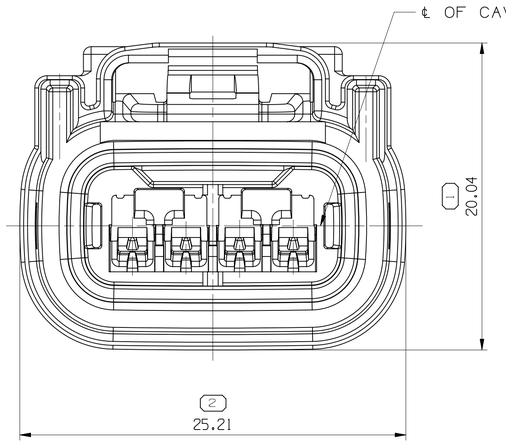

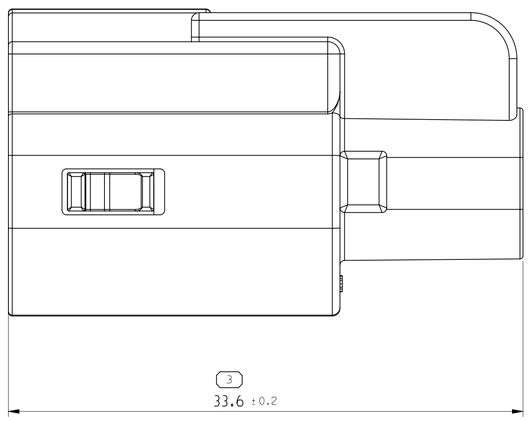

DIN ISO 2768	Tolerance Class medium (m)						
Linear Dimensions except for broken edges	Permissible deviations for basic size range (mm)						
	0.5 *) up to 3	over 3 up to 6	over 6 up to 30	over 30 up to 120	over 120 up to 400	over 400 up to 1000	over 1000 up to 2000
	±0.1	±0.1	±0.2	±0.3	±0.5	±0.8	±1.2
Broken edges (radii, chamfers)	Permissible deviations for basic size range (mm)						
	0.5 *) up to 3		over 3 up to 6			over 6	
	±0.2		±0.5			±1	
	Permissible deviations for ranges of lengths, in mm, of the shorter side of the angle concerned						
Angular dimensions	up to 10	over 10 up to 50	over 50 up to 120		over 120 up to 400		over 400
	±1°	±0° 30'	±0° 20'		±0° 10'		±0° 5'

*) For nominal sizes below 0.5mm, the deviations shall be indicated adjacent to the relevant nominal size(s).

NOTES:
UNLESS OTHERWISE SPECIFIED:

1) TOLERANCE ON:
   DIN ISO 2768 (m)

2) COLOR: BLACK

3) MATERIAL: BASF Ultradur B2300G6 HR
   25% REGRIND MAX

A ——— LINE DRAWN THROUGH A PART NUMBER INDICATES THAT PHYSICAL PARTS ARE NOT AVAILABLE FOR ORDERING.

PART NUMBERS THAT DO NOT HAVE A LINE PRESENT INDICATE THAT PHYSICAL PARTS ARE AVAILABLE FOR ORDERING.

CONTACT APTIV SALES TO ASSURE AVAILABILITY OF PARTS.

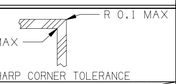

SHARP CORNER TOLERANCE

DIM TO CHECK	DIMENSIONAL RANGE (MM)									CHART - E1
( ) DIM FOR HELP	FROM	> 0	> 20	> 30	> 70	>100	>150	>200	>250	>300
	TO	20	30	70	100	150	200	250	300	400
THEORETIC DIM	TOLERANCE UNLESS OTHERWISE SPECIFIED									
		±0.15	±0.2	±0.3	±0.4	±0.5	±0.6	±0.8	±1	±1.2
	ANGULAR TOLERANCE ±2°									

DWG TYP
PART DRAWING

WEIGHT (GR)

VOLUME (CM³)

ROUTING

DISTR CODE
D

UNLESS OTHERWISE SPECIFIED

GENERAL TOLERANCES ACCORDING TO:
SEE CHART

GD&T ACCORDING TO:
ASME Y14.5M-1994

REFERENCE

THIRD ANGLE PROJECTION

DO NOT SCALE
USE MATH DATA

CAD NX

•APTIV•

CONNECTION SYSTEMS
Chennai, India
COPYRIGHT 2016 APTIV. ALL RIGHTS RESERVED.

THIS DRAWING IS THE PROPERTY OF APTIV AND CONTAINS APTIV CONFIDENTIAL INFORMATION. THE REPRODUCTION, DISTRIBUTION AND UTILIZATION OF THIS DOCUMENT OR ITS RELATED CAD MATH DATA, AS WELL AS COMMUNICATION OF ANY CONTENT TO OTHERS, WITHOUT EXPRESS AUTHORIZATION, IS PROHIBITED.

		DATE
DR	BAEK,HYUN-CHUL	28MY16
APVD1	JUNG,JAE-YUP	28MY16
APVD2	PARK,JOO-HYUN	28MY16
APVD3		
APVD4		
APVD5		

SUBSTANCES OF CONCERN AND RECYCLED CONTENT PER APTIV 10949001

MATERIAL
SEE NOTES

DRAWING NAME
CONN 4 F APEX 150 SLD

DRAWING NUMBER
33512566

SIZE	SCALE	FRAME NO	SHEET NO	STG	REV	N/P
A1	5:1	1 OF 1	1 OF 1	R	01	-