SYMBOL DEFINITION			MISSING SYMBOLS
A DIMENSION WITHOUT AN INSPECTION REPORT SYMBOL (3) DOES NOT REQUIRE INSPECTION. IT MAY BE CONTROLLED ON THE INDIVIDUAL COMPONENT DRAWING.	TOTAL NO OF INSPECTIONS REQUIRED	11	NO MISSING SYMBOL NUMBER
	LAST NO. USED	8	

DWG STATUS DATE	STG	REV	N/P	CHG	ZONE	REVISION HISTORY	AUTH	DR	APVD 1	APVD 2
27MA14	R	01				INITIAL RELEASE		KR	PJH	LMY
28MY14	R	02				CHANGE LATCH & MATERIAL		YJH	JJY	LMY
17FE17	R	03			D12	DESIGN CHANGE LATCH GUIDE RIB		KYM	JJY	PJH

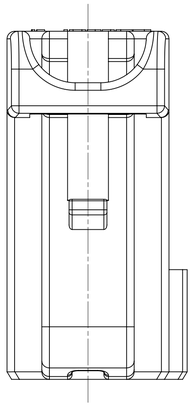

NO	PART NUMBER	DESCRIPTION	CABLE SIZE(mm²)	FINISH(μm)	REMARKS
12	60013641	DCK 2.8 FEMALE TERMINAL	1.25-2.5	Sn 1-3	
11	60013631	DCK 2.8 FEMALE TERMINAL	0.5-0.75	Sn 1-3	
10	60013611	DCK 2.8 FEMALE TERMINAL	0.22-0.3	Sn 1-3	
9	60013644	DCK 2.8 FEMALE TERMINAL	1.25-2.5	Au 0.8 MIN.	
8	60013634	DCK 2.8 FEMALE TERMINAL	0.5-0.75	Au 0.8 MIN.	
7	60013614	DCK 2.8 FEMALE TERMINAL	0.22-0.3	Au 0.8 MIN.	
6	F928600	DUOTWIN 0.64 FEMALE TERMINAL	0.75	Sn 1-3	
5	60080131	DUOTWIN 0.64 FEMALE TERMINAL	0.5	Sn 1-3	
4	60080111	DUOTWIN 0.64 FEMALE TERMINAL	0.22-0.3	Sn 1-3	
3	F628600	DUOTWIN 0.64 FEMALE TERMINAL	0.75	Au 0.8 MIN.	
2	60080134	DUOTWIN 0.64 FEMALE TERMINAL	0.5	Au 0.8 MIN.	
1	60080114	DUOTWIN 0.64 FEMALE TERMINAL	0.22-0.3	Au 0.8 MIN.	

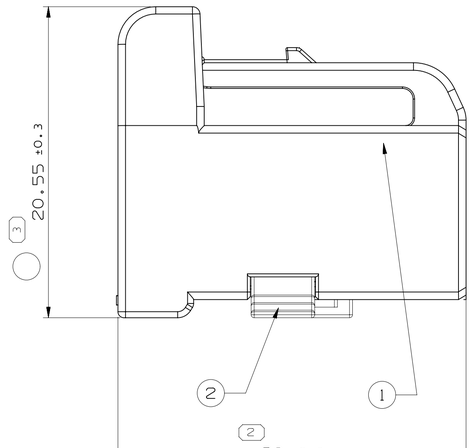

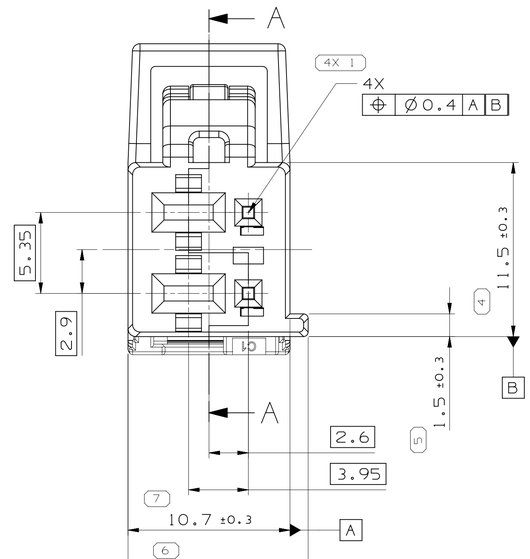

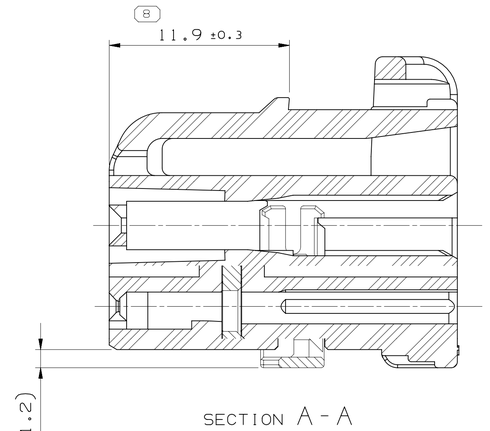

SECTION A-A

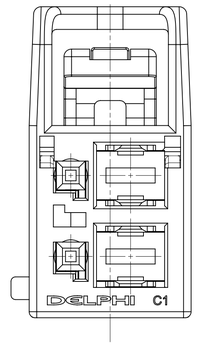

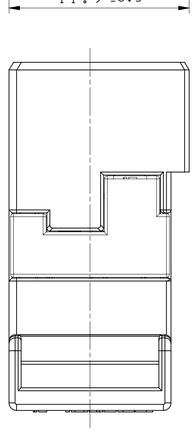

NOTES

1. UNLESS OTHERWISE SPECIFIED AND/OR INDICATED:

   DIMENSIONS ARE TO FACE OF VIEW SHOWN AND AUTOMATICALLY ROUNDED BY COMPUTER FOR INSPECTION (SEE MATH MODEL FOR PRECISE DIMENSIONS). FOR ALL OTHER DIMENSIONS NOT SHOWN BUT REQUIRED FOR TOOL BUILD, SEE MATH MODEL FOR PRECISE TOOL PATH DATA.

2. FOR MATING CONFIGURATION REQUIREMENTS, SEE PART NUMBER 30235901.

NO	PART NUMBER	DESCRIPTION	MATERIAL	QTY	REMARKS
2	33146414	MIXED DUOTWIN 0.64 DCK 2.8 4WAY FEMALE SECONDARY LOCK	M4698004 PBT GF30 BLUE	1	
1	33146413	MIXED DUOTWIN 0.64 DCK 2.8 4WAY FEMALE HOUSING	M2265002 PBT GF15 BLK	1	

A ~~LINE~~ LINE DRAWN THROUGH A PART NUMBER INDICATES THAT PHYSICAL PARTS ARE NOT AVAILABLE FOR ORDERING.

PART NUMBERS THAT DO NOT HAVE A LINE PRESENT INDICATE THAT PHYSICAL PARTS ARE AVAILABLE FOR ORDERING.

CONTACT APTIV SALES TO ASSURE AVAILABILITY OF PARTS.

DWG TYPE: PART DRAWING

STYLE:

VOLUME (CM³): DISTR CODE: D

UNLESS OTHERWISE SPECIFIED

THIS DOCUMENT IS IN ACCORDANCE WITH ASME Y14.5M-1994 AS AMENDED BY THE GM GLOBAL DIMENSIONING AND TOLERANCING ADDENDUM-2001. SEPARATE PATTERNS OF FEATURES MAY BE GAGED SEPARATELY REGARDLESS OF DATUM REFERENCES.

ALL DIMENSIONS ARE IN MILLIMETERS

REFERENCE

DIMENSIONAL RANGE (MM)									CHART E1
FROM TO	> 0 20	> 20 30	> 30 70	> 70 100	>100 150	>150 200	>200 250	>250 300	>300 400
TOLERANCE UNLESS OTHERWISE SPECIFIED	±0.15	±0.2	±0.3	±0.4	±0.5	±0.6	±0.8	±1	±1.2
ANGULAR TOLERANCE ±2°									

THIRD ANGLE PROJECTION

DO NOT SCALE

USE MATH DATA

CAD NX

•APTIV•

DELPHI CORPORATION

TROY, MI 48098

COPYRIGHT 2014 DELPHI CORPORATION AND/OR ITS AFFILIATES. ALL RIGHTS RESERVED.

THIS DRAWING IS THE PROPERTY OF DELPHI CORPORATION AND CONTAINS DELPHI CONFIDENTIAL INFORMATION. THE REPRODUCTION, DISTRIBUTION AND UTILIZATION OF THIS DOCUMENT OR ITS RELATED CAD MATH DATA, AS WELL AS COMMUNICATION OF ANY CONTENT TO OTHERS, WITHOUT EXPRESS AUTHORIZATION, IS PROHIBITED.

		DATE
DR	KIM, RYAN	27MA14
APVD1	PARK, JOO-HYUN	27MA14
APVD2	LEE-MIN-YOUNG	27MA14
APVD3		
APVD4		
APVD5		

SUBSTANCES OF CONCERN AND RECYCLED CONTENT PER APTIV 10949001

MATERIAL: SEE CHART

DRAWING NAME: MIXED DUOTWIN 0.64 DCK 2.8 4WAY FEMALE CONNECTOR ASSEMBLY

DRAWING NUMBER: 33146412

SIZE	SCALE	FRAME NO	SHEET NO	STG	REV	N/P
A1	5:1	1 OF 1	1 OF 1	R	03	

User: 70968
Path: C:\Users\70968.12\CUS01-S01\03
Date: 23-Sep-20 Time: 16:39:35
Job: 70968.192320200,13108,47pass.cub