VERROU-SECONDAIRE OUVERT
SECONDARY-LOCK OPEN

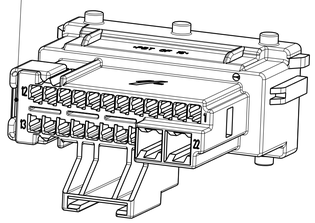

ECHELLE / *SCALE* 2:1

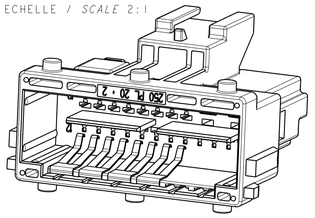

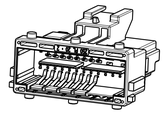

ECHELLE / *SCALE* 1:1

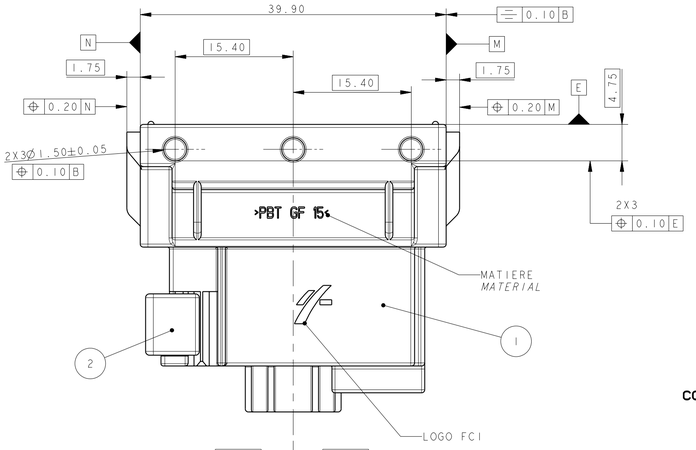

COUPE / *SECTION* **E-E**

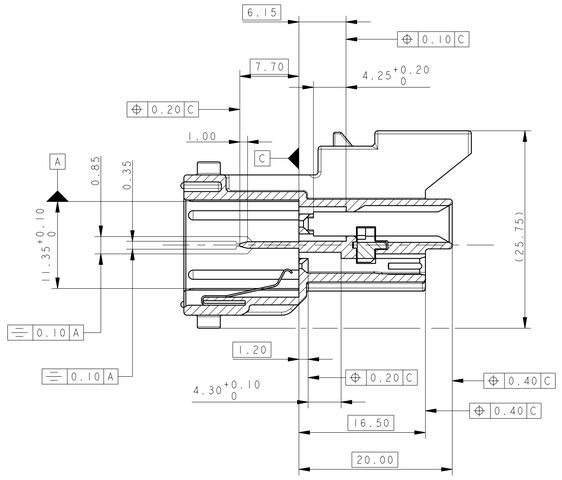

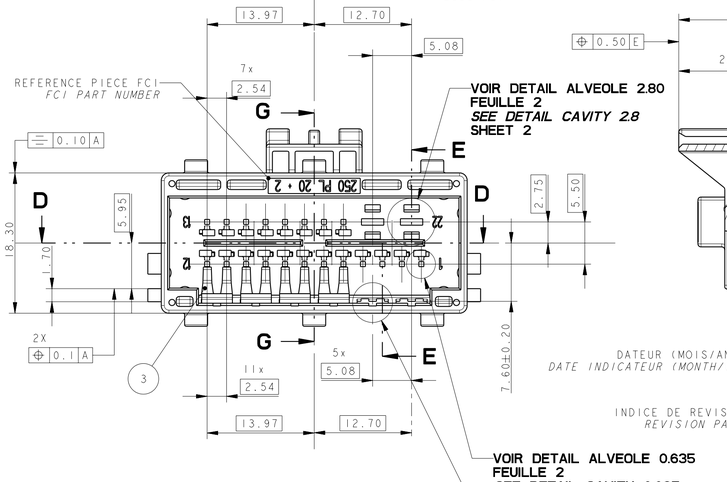

COUPE / *SECTION* G-G

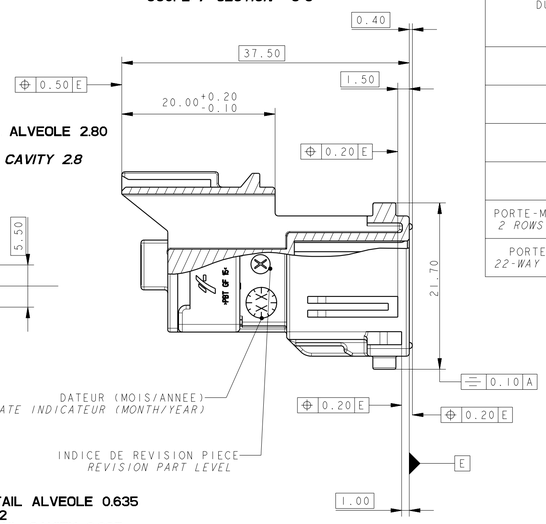

COUPE / *SECTION* D-D

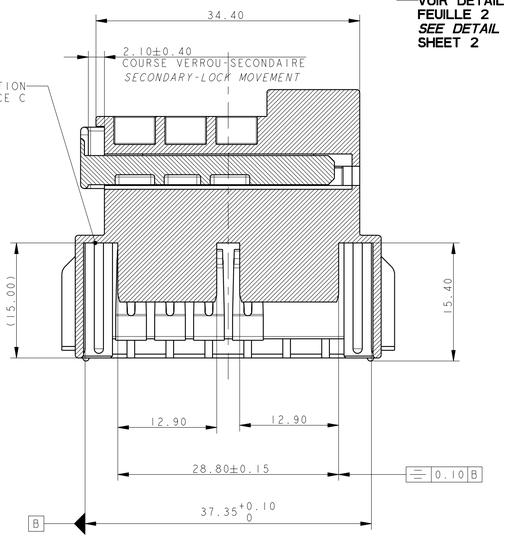

VUE ARRIERE
REAR VIEW

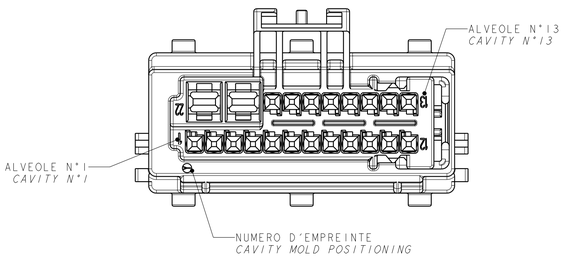

VUE AVEC LANGUETTES
VIEW WITH MALE TERMINALS
ECHELLE / SCALE 5:1

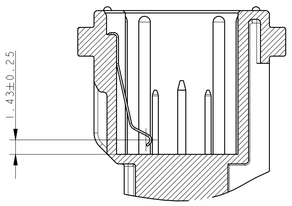

NOTA: Ce plan etant un extrait du plan de definition, on fera reference pour tout litige au plan de definition.
NOTE: The present drawing being an abstract of the definition drawing, any dispute will be referred to the definition drawing.

NOMENCLATURE
PARTS LIST

REP.	QUANTITE *QUANTITY*	DESIGNATION	MATIERE *MATERIAL*	COULEUR *COLOUR*	REFERENCE FCI *FCI P/N*
3	SELON VERSION *ACCORDING TO VERSION*	SHUNT	ALLIAGE CUIVRE *COPPER ALLOY*	/	250 C 2 002
2	1	VERROU-SECONDAIRE *SECONDARY-LOCK*	PBT GF 15	VERT *GREEN*	250 M 5 003
1	1	ISOLANT PORTE-LANGUETTES 22 VOIES *22-WAY MALE HOUSING*	PBT GF 15	SELON CODEUR *ACCORDING TO CODING*	250 I X 007

PRODUITS ASSOCIES (POUR INFORMATION)
ASSOCIATED PARTS (FOR INFORMATION)

LANGUETTES *MALE TERMINALS*		*VOIES / WAYS* 1 to 20			
	TYPE DE PROTECTION ET EPAISSEUR *SURFACE FINISH OF CONTACT AREA*	SECTION *GAUGE* (mm²)	0.22-0.50	0.50-0.75	
DUOTWIN 0,64 (FCI) *OR MOS*	0,8 µm Au		6 018 10 14	6 018 10 34	
	1 -3 µm Sn		6 018 10 11	6 018 10 31	
LANGUETTES *MALE TERMINALS*		**VOIES / *WAYS* 1 to 20**			
		SECTION *GAUGE* (mm²)	>0.20-0.35	0.5-1.0	>1.0-2.5
DCS2 (FCI) *OR COMPATIBLE*	1 -3 µm Sn		6 011 06 11	6 011 06 31	6 011 06 41
DESIGNATION		**REFERENCE FCI** *FCI P/N*		**REFERENCE CLIENT** *CUSTOMER P/N*	
PORTE-MODULE CLIPS 2 RANGEES *2 ROWS FEMALE MODULE HOLDER*		250 BC 12 2 F X 00A			
PORTE-CLIPS 22 VOIES FIL *22-WAY WIRE FEMALE CONNECTOR*		250 PC 22 9 S X 00A			

NOTA :
1 - CAHIER DES CHARGES RENAULT: 36-05-019 / -- E
2 - CAHIER DES CHARGES SIEMENS: 10 00 196 / IND F
3 - CLASSE DE TEMPERATURE : CLASSE I (-40°C ; +85°C)
4 - CLASSE DE VIBRATION : CLASSE I
5 - CLASSE D'ETANCHEITE : 0
6 - EFFORT D'ACCOUPLEMENT DU CONNECTEUR SUR INTERFACE: <60N
7 - TENUE A L'ARRACHEMENT DU CONNECTEUR SUR INTERFACE: >100N
8 - MONTAGE SUR ATTACHE: <=30N
9 - TENUE A L'ARRACHEMENT DE L'ATTACHE:>=60N
10 - DOSSIER DE PRECONISATION : PU 036
11 - CONDITIONNEMENT :CONFORME A LA NORME GALIA VOIR PU 036
12 - PRODUIT CONFORME A LA NORME 00-10-415/--N
13 - SUBSTANCES A USAGES INTERDITES OU SOUMISES A RESTRICTION SELON LA NORME 00-10-050/--F
14 - IDENTIFIANT IMDS : VOIR TABLEAU
15 - POIDS DU PRODUIT AVEC 4 SHUNTS: 0.009976 kg ±10%
16 - POIDS DU PRODUIT SANS SHUNT: 0.00957 kg ±10%
17 - CONFORME AU PLAN D'INTERFACE, REFERENCE RSA: 8200 103 926
18 - LE MODELE REPRESENTE EST LE CODAGE NOIR

NOTE :
1 - RENAULT'S SPECIFICATION: 36-05-019 / -- E
2 - SIEMENS SPECIFICATION: 10 00 196 / IND F
3 - TEMPERATURE CLASS : CLASSE I (-40°C ; +85°C)
4 - VIBRATION CLASS : CLASS I
5 - SEALING CLASS : 0
6 - CONNECTOR MATING FORCE ON INTERFACE: <60N
7 - CONNECTOR RETENTION FORCE ON INTERFACE: >100N
8 - ATTACHMENT MATING FORCE ON PC: <=30N
9 - ATTACHMENT RETENTION FORCE ON PC: >=60N
10 - USER'S MANUAL : PU 036
11 - PACKAGING :ACCORDING TO GALIA SPECIFICATION SEE PU 036
12 - PRODUCT CONFORM TO THE NORM 00-10-415/--N
13 - PROHIBITED OR RESTRICTED SUBSTANCES LIST AND DECLARATION MODES FOLLOWING THE NORM 00-10-050/--F
14 - IMDS ID : SEE TABLE
15 - MASS OF THE PRODUCT WITH 4 SHUNTS : 0.009976 kg ±10%
16 - MASS OF THE PRODUCT WITHOUT SHUNT : 0.00957 kg ±10%
17 - ACCORDING TO INTERFACE DRAWING, RSA P/N: 8200 103 926
18 - THE SHOWN VERSION IS THE BLACK ONE

ECN-NO. *NUMERO ECN*	POSITION *POSITION*	CHANGE DESCRIPTION *MODIFICATION*
09-010	-	-
	-	-
	-	-
	-	-
	-	NEW VERSION WITH 4 SHUNTS CLIPS

PRODUCT SPEC. *SPECIF. PRODUIT*: -
PACKAGING SPEC. *SPECIF. EMBALLAGE*: -
APPLICATION SPEC. *SPECIF. APPLICATION*: -

THIS DRAWING AND ALL OTHER INFORMATION CONTAINED THEREIN IS PROPRIETARY AND THE PROPERTY OF FCI. This drawing may not be copied, reproduced or disclosed to any third party without the expressed written permission of FCI. © FCI April 1999
CE PLAN ET LES INFORMATIONS CONTENUES DANS CE PLAN SONT PROPRIETAIRES ET LA PROPRIETE DE FCI. Ce plan ne peut être copié, reproduit ou transmis sans l'autorisation expresse et écrite de FCI. © FCI Avril 1999

TOLERANCES *TOLERANCES*: ±0.10 ±2° -
COUNTERPART N° *CONTRE PARTIE N°*: -
MATERIAL : *MATIERE* : SEE TABLE -
SURFACE FINISH *ETAT DE SURFACE*: -
COLOUR : *COULEUR* : SEE TABLE -
DO NOT MEASURE DRAWING *NE PAS PRENDRE DE COTES*
TOOL NO. *OUTIL N°*: - ECO Loc. Code *CODE B.E.*: FE
ISO PROJECTION *PROJECTION ISO*
DIMENSION IN MILLIMETERS *DIMENSIONS EN MILLIMETRES*
CAD SYSTEM: pro / eng.
DWG SIZE *FORMAT*: A1

	DATE *DATE*	NAME *NOM*
CREATED BY *CREE PAR*	2001-03-15	CCA
MODIFIED BY *MODIF. PAR*	2009/04/01	Armand TECHENE
CHECKED BY *VERIF. PAR*	2009/04/01	Patrice CAPPE
APPROVED BY *APPR. PAR*	2009/04/01	Pascal MENARD

TITLE *DESIGNATION*: 22-WAY MALE CONNECTOR
PROJECT *PROJET*: FLEX CONNECTOR MODUPACK
ESR NO. *NUMERO ESR*: FRA-0881
CAT. NO. *NUMERO CAT.*: 250PL229SX00A
DRAWING NUMBER *REF. PLAN*: PCC0621874
REV. *IND.*: A
STATE *ETAT*: SERIAL RELEASED
PART NUMBER *REF. ARTICLE*: See Table
REV. *IND.*: -
APPROVAL LEVEL *NIV. D'APPROBATION*: -
SHEET *FEUILLE*: 1
of *sur*: 3
SCALE *ECH.*: 5:2
FILE NAME *NOM DE FICHIER*: PCC0621874

DOCUMENT UNDER PDS CONTROL *DOCUMENT GERE SOUS P.D.S.*
NO MODIFICATION ALLOWED OUTSIDE *PAS DE MODIFICATION EN DEHORS*

EUR C04 112 F29

TABLE DES VERSIONS / *VERSIONS LIST*

VUE AVANT
FRONT VIEW

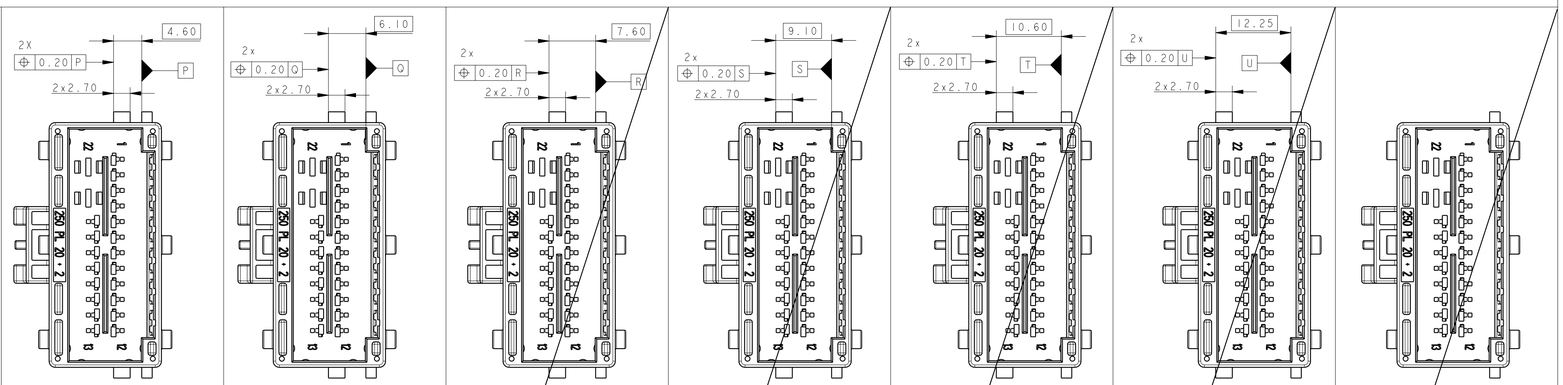

SHUNT SUR ALVEOLES: *SHUNT ON CAVITIES:*												
01/02	03/04	05/06	07/08	09/10	11/12	COULEUR CODAGE *CODING COLOUR*	CODAGE NOIR *BLACK CODING*	CODAGE MARRON *BROWN CODING*	CODAGE ROUGE *RED CODING*	CODAGE ORANGE *ORANGE CODING*	CODAGE VERT *GREEN CODING*	CODAGE BLEU *BLUE CODING*	CODAGE VIOLET *PURPLE CODING*
-	-	-	-	-	-	REFERENCE FCI *FCI P/N*	250 PL 22 9 S 0 001	250 PL 22 9 S 1 001	250 PL 22 9 S 2 001	250 PL 22 9 S 3 001	250 PL 22 9 S 5 001	250 PL 22 9 S 6 001	250 PL 22 9 S 7 001
						INDICE PIECE *PART LEVEL*	A	A	A	A	A	A	A
						IMDS	90348363/1	5263858/4					
-	-	-	X	X	X	REFERENCE FCI *FCI P/N*	250 PL 22 9 S 0 002	250 PL 22 9 S 1 002	250 PL 22 9 S 2 002	250 PL 22 9 S 3 002	250 PL 22 9 S 5 002	250 PL 22 9 S 6 002	250 PL 22 9 S 7 002
						INDICE PIECE *PART LEVEL*	A	A	A	A	A	A	A
-	-	X	X	X	X	REFERENCE FCI *FCI P/N*	F621400						
						INDICE PIECE *PART LEVEL*	A	A	A	A	A	A	A
						IMDS	5263746/4						

DETAIL ALVEOLE 0.635
DETAIL CAVITY 0.635
ECHELLE / *SCALE* 10:1

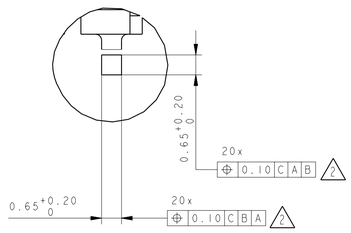

NOTA: L'ALVEOLE DEFINIE EST COMPATIBLE MQS
THE DEFINED CAVITY IS COMPATIBLE WITH MQS

DETAIL ALVEOLE 2.80
DETAIL CAVITY 2.80
ECHELLE / *SCALE* 10:1

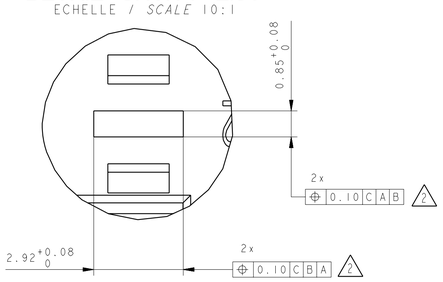

NOTA: L'ALVEOLE DEFINIE EST COMPATIBLE TIMER
THE DEFINED CAVITY IS COMPATIBLE WITH TIMER

DETAIL ALVEOLE SHUNT
DETAIL SHUNT CAVITY
ECHELLE / SCALE 10:1

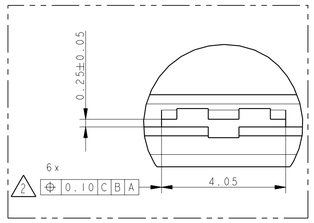

NOTA: Ce plan etant un extrait du plan de definition, on fera reference pour tout litige au plan de definition.
NOTE The present drawing being an abstract of the definition drawing, any dispute will be referred to the definition drawing

09-010	-	-
	-	-
	-	-
	-	-
	-	NEW VERSION WITH 4 SHUNTS CLIPS

ECN-NO. / *NUMERO ECN* | POSITION / *POSITION* | CHANGE DESCRIPTION / *MODIFICATION*

PRODUCT SPEC. / *SPECIF. PRODUIT*: - | PACKAGING SPEC. / *SPECIF. EMBALLAGE*: - | APPLICATION SPEC. / *SPECIF. APPLICATION*: -

THIS DRAWING AND ALL OTHER INFORMATION CONTAINED THEREIN IS PROPRIETARY AND THE PROPERTY OF FCI. This drawing may not be copied, reproduced or disclosed to any third party without the expressed written permission of FCI. © FCI April 1999

CE PLAN ET LES INFORMATIONS CONTENUES DANS CE PLAN SONT PROPRIETAIRES ET LA PROPRIETE DE FCI. Ce plan ne peut être copié, reproduit ou transmis sans l'autorisation expresse et écrite de FCI. © FCI Avril 1999

TOLERANCES / *TOLERANCES*: ±0.10 ±2° | MATERIAL / *MATIERE*: SEE TABLE | SURFACE FINISH / *ETAT DE SURFACE*: - | COUNTERPART Nr. / *CONTRE PARTIE N°*: - | COLOUR / *COULEUR*: SEE TABLE

DO NOT MEASURE DRAWING / *NE PAS PRENDRE DE COTES* | TOOL NO. / *OUTIL N°*: - | ECO Loc. Code / *CODE B.E.*: FE

ISO PROJECTION / *PROJECTION ISO* | DIMENSION IN MILLIMETERS / *DIMENSIONS EN MILLIMETRES* | CAD SYSTEM: pro / eng. | DWG SIZE / *FORMAT*: A1

	DATE / *DATE*	NAME / *NOM*
CREATED BY / *CREE PAR*	2001-03-15	CCA
MODIFIED BY / *MODIF. PAR*	2009/04/01	Armand TECHENE
CHECKED BY / *VERIF. PAR*	2009/04/01	Patrice CAPPE
APPROVED BY / *APPR. PAR*	2009/04/01	Pascal MENARD

TITLE / *DESIGNATION*: 22-WAY MALE CONNECTOR

PROJECT / *PROJET*: FLEX CONNECTOR MODUPACK

ESR NO. / *NUMERO ESR*: FRA-0881 | CAT. NO. / *NUMERO CAT.*: 250PL229SX00A

DRAWING NUMBER / *REF. PLAN*: PCC0621874 | REV. / *IND.*: A

STATE / *ETAT*: SERIAL RELEASED

PART NUMBER / *REF. ARTICLE*: See Table | REV. / *IND.*: -

APPROVAL LEVEL / *NIV. D'APPROBATION*: - | SHEET / *FEUILLE*: 2 | of / *sur*: 3 | SCALE / *ECH.*: 5:2

FILE NAME / *NOM DE FICHIER*: PCC0621874

DOCUMENT UNDER PDS CONTROL / ***DOCUMENT GERE SOUS P.D.S.***
NO MODIFICATION ALLOWED OUTSIDE / ***PAS DE MODIFICATION EN DEHORS***

EUR C04 112 F29

POUR INFORMATION
FOR INFORMATION

VUE AVANT ACCOUPLEMENT (ACCOSTAGE)
VIEW BEFORE MATING (ACCOSTING)

ECHELLE / *SCALE* 5:2

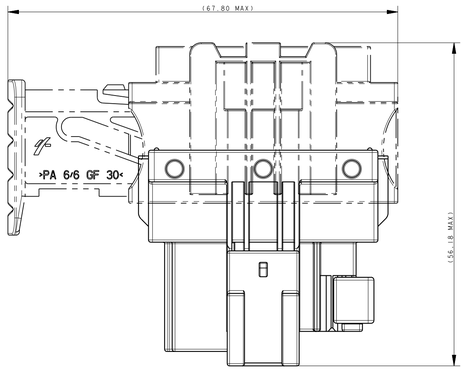

ECHELLE / *SCALE*: 5:2

VUE APRES ACCOUPLEMENT
VIEW AFTER MATING

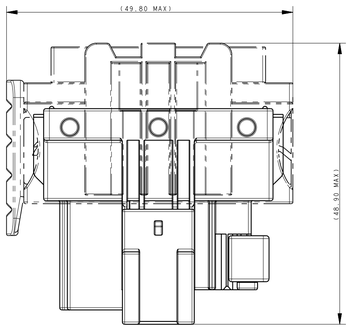

INTERFACE AVEC ATTACHE C.P.I.O. *INTERFACE WITH C.P.I.O. FASTENER*	
REFERENCE FCI ATTACHE C.P.I.O. *C.P.I.O. FCI P/N*	211 X 050

COUPE / *SECTION* F-F

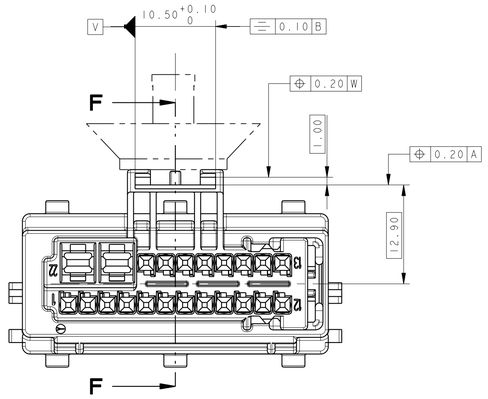

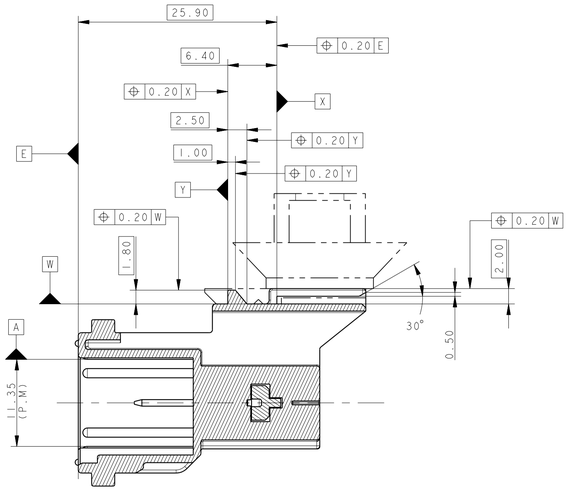

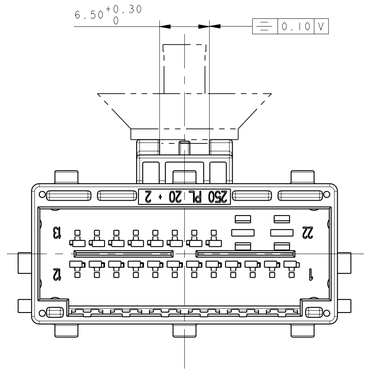

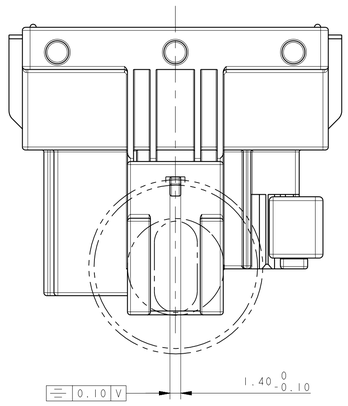

NOTA: Ce plan etant un extrait du plan de definition, on fera reference pour tout litige au plan de definition.
NOTE: The present drawing being an abstract of the definition drawing, any dispute will be referred to the definition drawing

ECN-NO. *NUMERO ECN*	POSITION *POSITION*	CHANGE DESCRIPTION *MODIFICATION*
09-010	-	-
	-	-
	-	-
	-	-
	-	NEW VERSION WITH 4 SHUNTS CLIPS

PRODUCT SPEC. *SPECIF. PRODUIT*: -
PACKAGING SPEC. *SPECIF. EMBALLAGE*: -
APPLICATION SPEC. *SPECIF. APPLICATION*: -
THIS DRAWING AND ALL OTHER INFORMATION CONTAINED THEREIN IS PROPRIETARY AND THE PROPERTY OF FCI. This drawing may not be copied, reproduced or disclosed to any third party without the expressed written permission of FCI. © FCI April 1999
CE PLAN ET LES INFORMATIONS CONTENUES DANS CE PLAN SONT PROPRIETAIRES ET LA PROPRIETE DE FCI. Ce plan ne peut être copié, reproduit ou transmis sans l'autorisation expresse et écrite de FCI. © FCI Avril 1999

TOLERANCES *TOLERANCES*: ±0.10 ±2° -
COUNTERPART N° *CONNE PARTIE N°*: -
MATERIAL : *MATIERE* : SEE TABLE -
COLOUR : *COULEUR* : SEE TABLE
SURFACE FINISH *ETAT DE SURFACE*: -
DO NOT MEASURE DRAWING *NE PAS PRENDRE DE COTES*: -
TOOL NO. *OUTIL N°*: -
ECO Loc. Code *CODE B.E.*: FE
CAD SYSTEM: pro / eng.
ISO PROJECTION *PROJECTION ISO*
DIMENSION IN MILLIMETERS *DIMENSIONS EN MILLIMETRES*
DMS SIZE *FORMAT*: A1

	DATE *DATE*	NAME *NOM*
CREATED BY *CREE PAR*	2001-03-15	CCA
MODIFIED BY *MODIF. PAR*	2009/04/01	Armand TECHENE
CHECKED BY *VERIF. PAR*	2009/04/01	Patrice CAPPE
APPROVED BY *APPR. PAR*	2009/04/01	Pascal MENARD

TITLE *DESIGNATION*: **22-WAY MALE CONNECTOR**
PROJECT *PROJET*: **FLEX CONNECTOR MODUPACK**
ESR NO.: *NUMERO ESR*: FRA-0881
CAT. NO.: *NUMERO CAT.*: 250PL229SX00A
DOCUMENT UNDER PDS CONTROL *DOCUMENT GERE SOUS P.D.S.*
NO MODIFICATION ALLOWED OUTSIDE *PAS DE MODIFICATION EN DEHORS*
FILE NAME *NOM DE FICHIER*: PCC0621874

DRAWING NUMBER *REF. PLAN*: **PCC0621874** REV. *IND.*: **A**
STATE *ETAT*: **SERIAL RELEASED**
PART NUMBER *REF. ARTICLE*: **See Table** REV. *IND.*: -
APPROVAL LEVEL *NIV. D'APPROBATION*: -
SHEET *FEUILLE*: 3 of / sur 3
SCALE *ECH.*: 3:1

EUR_C04 112 F29