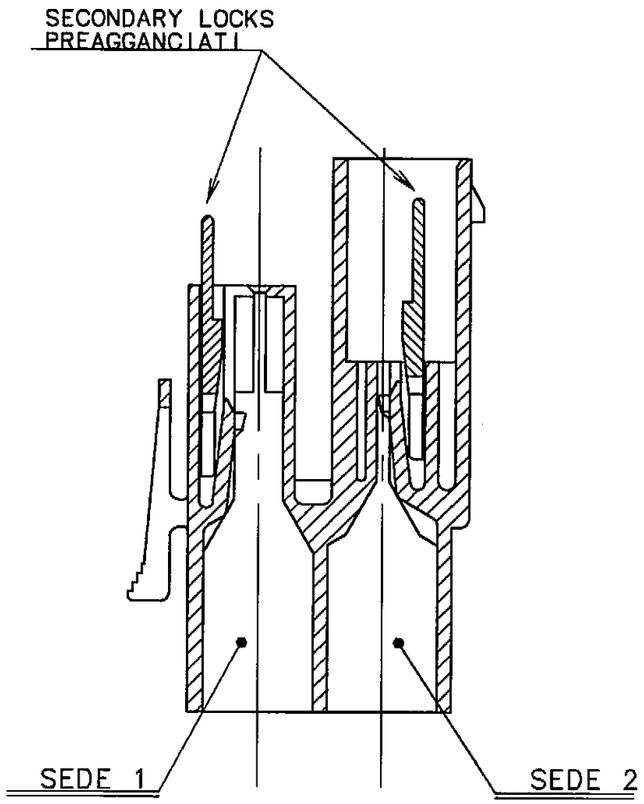

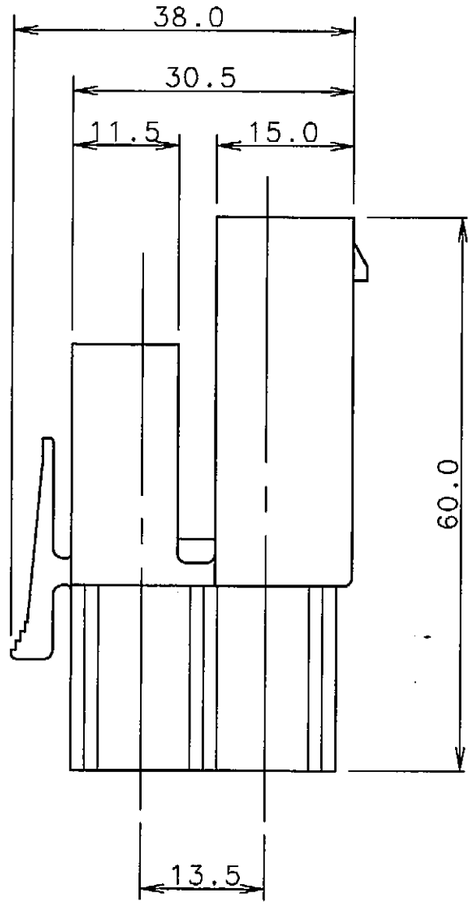

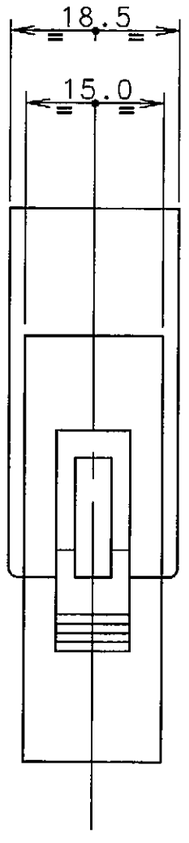

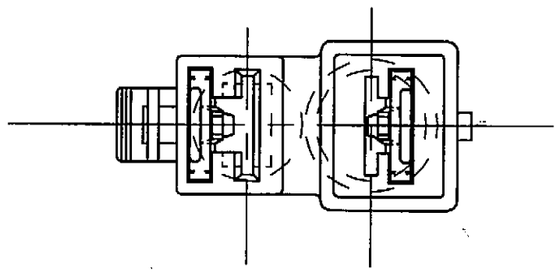

N° CATALOGO	COLORE
DCSHHPE02BK	NERO
DCSHHPE02RD	ROSSO
DCSHHPE02BL	BLU

SEDE 1 : ADATTA PER CAPOCORDA FEMMINA D.C.S. SERIE 9.5

RIF. FRAMATOME	SEZ. AGGRAFFABILE	DIAMETRO ESTERNO ISOLANTE
6 007 02 51	2.5 ÷ 4.0 mm²	3.0 ÷ 3.7 mm
6 007 02 61	4.0 ÷ 6.0 mm²	3.7 ÷ 4.3 mm
6 007 02 71	6.0 ÷ 10.0 mm²	4.3 ÷ 6.4 mm

SEDE 2 : ADATTA PER CAPOCORDA MASCHIO D.C.S. SERIE 9.5

RIF. FRAMATOME	SEZ. AGGRAFFABILE	DIAMETRO ESTERNO ISOLANTE
6 017 02 51	2.5 ÷ 4.0 mm²	3.0 ÷ 3.7 mm
6 017 02 61	4.0 ÷ 6.0 mm²	3.7 ÷ 4.3 mm
6 017 02 71	6.0 ÷ 10.0 mm²	4.3 ÷ 6.4 mm

BLOCCHETTO ERMAFRODITA ACCOPPIABILE CON SE STESSO
PREDISPOSTO PER EVENTUALE VERSIONE A TENUTA

SHEET 1 of 1

FSC307892

Description :
CONNETTORE DI POTENZA A 2 VIE PER CONTATTI D.C.S. SERIE 9.5

Draft R.Rampone

Date 17/02/95

We reserve the right to change dimensions or requirements without prior notice.

This is our exclusive property. It is not to be copied, reprinted or disclosed to a third party, nor used for manufacturing, without our written consent, and has to be returned to us in case of no usage.

Cat. No : VED.TABELLA

European projection
Not to scale
All dimensions in mm
Tolerances ± 0.3 mm
Unless otherwise specified

FCI
FRAMATOME CONNECTORS INTERNATIONAL
Framatome Connectors Italia S.p.A.

FSC307892
Customer drawing

Rev 2