CODE	PART NO	REV	MATERIAL	VOLUME CM³
A	35208065	01	POLYAMIDE BLEND	8.903
B	35208066	01	POLYAMIDE BLEND	8.908
C	35208067	01	POLYAMIDE BLEND	8.907
D	35208068	01	POLYAMIDE BLEND	8.891
E	35208069	01	POLYAMIDE BLEND	8.896

SYMBOL DEFINITION

A DIMENSION WITHOUT AN INSPECTION REPORT SYMBOL DOES NOT REQUIRE INSPECTION. IT MAY BE CONTROLLED ON THE INDIVIDUAL COMPONENT DRAWING.

TOTAL NO OF INSPECTIONS REQUIRED	31
LAST NO. USED	26

MISSING SYMBOLS

NO MISSING SYMBOL NUMBER

DWG STATUS						ZONE	REVISION HISTORY	AUTH	DR	APVD	APVD
DATE	SIZE	REV	SHT	ZNE							
12.NOV.18	R	01	-	-	-		CREATED PART DRAWING	440146	KZM	TY	KZM
11.JUL.19	R	02	-	-	-		REVISED DIM.#6,#12&#23,ADDED LETTER:	447927	KZM	TY	KZM
03MAR22	R	03	-	-	-		\	447627	YANG	LIN	ART

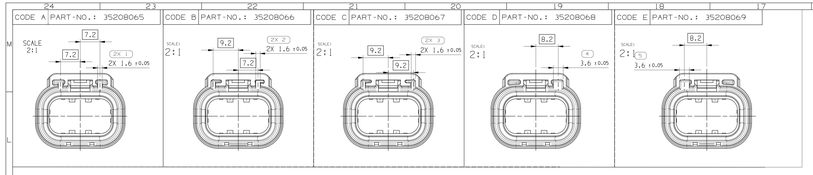

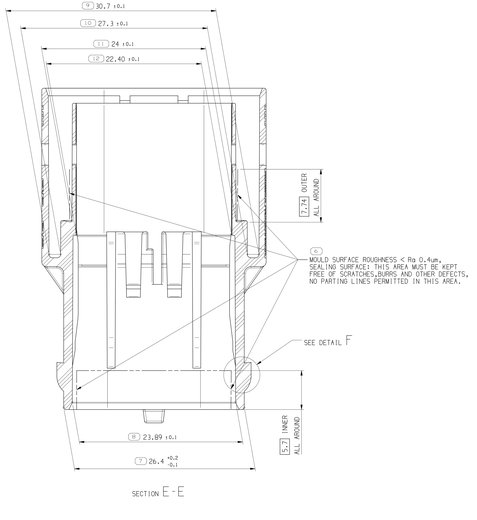

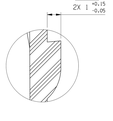

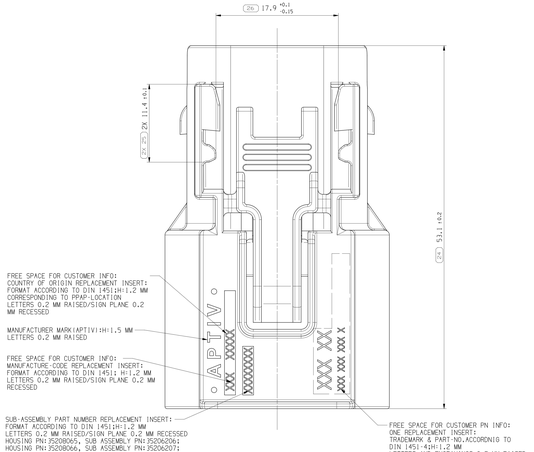

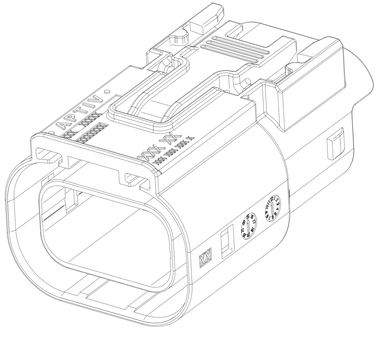

NOTES:

1. UNLESS OTHERWISE SPECIFIED AND/OR INDICATED:

   DIMENSIONS ARE TO FACE OF VIEW SHOWN AND AUTOMATICALLY ROUNDED BY COMPUTER FOR INSPECTION (SEE MATH MODEL FOR PRECISE DIMENSIONS). FOR ALL OTHER DIMENSIONS NOT SHOWN BUT REQUIRED FOR TOOL BUILD, SEE MATH MODEL FOR PRECISE TOOL PATH DATA.

2. THIS PRODUCT IS NOT CATEGORIZED AS AN APPEARANCE ITEM. MINOR IMPERFECTIONS INCLUDING, BUT NOT LIMITED TO, FLOW MARKS, COLOR BLEMISHES, GATE VESTIGE, AND SOFT FLASH THAT DO NOT AFFECT THE FIT, FORM, OR FUNCTION OF THE PART ARE PERMISSIBLE PER EANP,4-3.CS.01.EN.

3. NO REGRIND,EXCEPTION OF APTIV ENGINEERING APPROVAL .

4. THIS PART USED IN ASSEMBLY DRAWING 35214364 TYPICALLY.

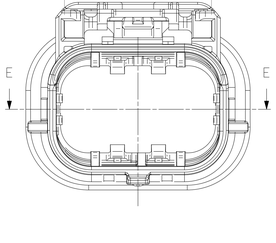

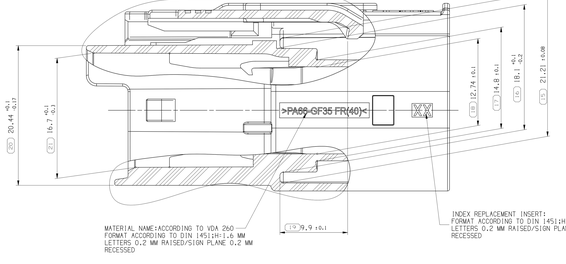

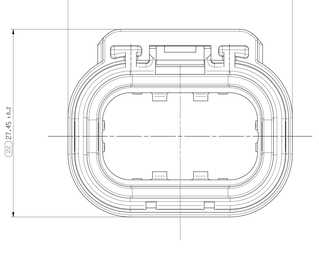

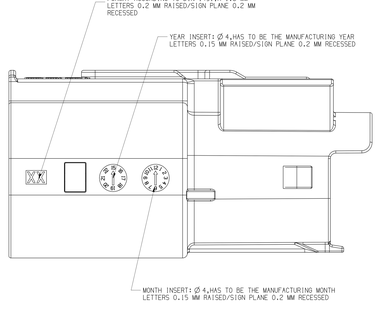

DRAWING NUMBER: 35214018						
SIZE	SCALE	FORMAT NO	SHEET NO	SHTS	REV	NOT
A1x3	5:1	2 OF 2	1 OF 1	R	01	-

(24) PROCESS SENSITIVE DIMENSION

DIMENSIONS ENCLOSED IN ( ) INDICATE REFERENCE DIMENSIONS AND NO TOLERANCE WITH ANY STANDARD.

DIMENSIONAL RANGE (MM)								
FROM	0.5	3	6	30	>70	>100	>200	>315
TO	3	6	30	>70	>100	>200	>315	>500
TOLERANCE (UNLESS OTHERWISE SPECIFIED)								
±0.1	±0.2	±0.3	±0.4	±0.5	±0.6	±0.8	±1.0	±1.5
ANGULAR TOLERANCE ±1°								

THIRD ANGLE PROJECTION

DO NOT SCALE USE MATH DATA

NX

THE DRAWN TURQUOISE PART NUMBER INDICATES THAT PHYSICAL PARTS ARE NOT AVAILABLE FOR ORDERING.

PART NUMBERS THAT DO NOT HAVE A LINE PRESENT INDICATE PHYSICAL PARTS ARE READY FOR ORDERING.

CONTACT APTIV SALES TO ASSURE AVAILABILITY OF PARTS.

DWG TYPE	PART DRAWING
STYLE	
VOLUME CM³	SEE CHART
SYSTEM UOM	D

UNLESS OTHERWISE SPECIFIED

THIS DOCUMENT IS IN ACCORDANCE WITH ASME Y14.5M-1994 UNLESS OTHERWISE SPECIFIED. DIMENSIONS AND TOLERANCING ACCORDING ISO1101. SEPARATE PATTERNS OF FEATURES MAY BE GROUP SEPARATELY REGARDLESS OF DATUM REFERENCES.

ALL DIMENSIONS ARE IN MILLIMETERS

REFERENCE

		DATE
DR		
APVD1	YAN DONGDONG	03MAR22
APVD2	LINK	03MAR22
APVD3	ARTHUR	03MAR22
APVD4		
APVD5		

SUBSTANCES OF CONCERN AND RECYCLED CONTENT PER APTIV (DRAFTED)

MATERIAL:

SEE CHART

DRAWING NAME

TAXI CONN F CTS 280 SLD MODULAR

DRAWING NUMBER: 35214018						
SIZE	SCALE	FORMAT NO	SHEET NO	SHTS	REV	NOT
A1x3	5:1	1 OF 2	1 OF 1	R	03	-

•APTIV•

CONNECTION SYSTEMS

Chennai, India

COPYRIGHT 2022 APTIV. ALL RIGHTS RESERVED.

THIS DRAWING IS THE PROPERTY OF APTIV AND CONTAINS APTIV CONFIDENTIAL INFORMATION. THE RECEIPT OR POSSESSION OF THIS DRAWING OR ITS UTILIZATION OF THIS DOCUMENT OR ITS RELATED CAD MATH DATA, WILL NOT BE COMMUNICATION OF ANY CONTENTS TO OTHERS, WITHOUT EXPRESS AUTHORIZATION, IS PROHIBITED.

35214018

Print: 12:14:09
Date: 03Mar22
Sheet: 1/1
Size: A1x3
Scale: 5:1
Author: YANG
Path: 35214018/01/01/01