NOTA	SPECIFICATION
1	CONNECTEUR CONFORME A STE PSA 96 269 436 99 ind E ET A LA SPECIFICATION TECHNIQUE MVL FEPS 09006 *FEMALE CONNECTOR ACCORDING TO STE PSA 96 269 436 99 ind E* *AND THE MVL TECHNICAL SPECIFICATION FEPS 09006*
2	CONNECTEUR SUIVANT: *FEMALE CONNECTOR ACCORDING TO:* -CLASSE DE TEMPERATURE T2 SELON B217050 rev C *TEMPERATURE CLASS T2 ACCORDING TO B217050 rev C* -CLASSE DE VIBRATION V1 SELON B217050 rev C et B217120 rev Or *ENGINE VIBRATOR CLASS V1 ACCORDING TO B217050 rev C AND B217120 rev Or* -NON ETANCHE CLASSE 0 *UNSEALED CLASS 0*
3	PRECONISATION D'UTILISATION: PU084 *USERS MANUAL: PU084*
4	ALVEOLE 0.635 COMPATIBLE DUO-TWIN, MQS (voir PRECONISATION d'UTILISATION) *0.635 CAVITY COMPATIBLE TO DUO-TWIN, MQS (See USER MANUAL)*
5	CONNECTEUR ET POSITION ALVEOLES CONFORMES AU PLAN D'INTERFACE STE 96 312 086 99 rev A *FEMALE CONNECTOR AND CAVITIES POSITION ACCORDING TO STE 96 312 086 99 rev A*
6	CONDITIONNEMENT SUIVANT NORME: E73 03 150G *PACKAGING ACCORDING TO STANDARD: E73 03 150G*
7	SECTION DE FILS 0.635: DE 0.35 A 0.75 mm² *0.635 WIRE SECTION: FROM 0.35 TO 0.75 mm²*
8	MASSE DU PRODUIT LIVRABLE: VOIR TABLEAU *DELIVERY CONNECTOR WEIGHT: SEE TABLE*
9	DEFAUTS D'ASPECT SUR ZONE NON FONCTIONNELLES ADMIS *VISUAL DEFECTS ON NO FUNCTIONAL AREAS ALLOWED*

3D VIEW M 1:1	Version	Rep	Reference / Indice *Reference / Revision*				Reference APTIV / Indice *APTIV Reference / Revision*		Qty/ Nbre	Designation	Matiere *Material*	Couleur *Colour*	Masse *Weight*
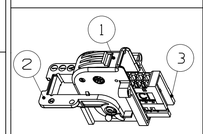	0°	3	PPI0000494			L	33500461	01	1	MODULE PORTE-CLIPS 12 VOIES *FEMALE TERMINAL CARRIER 12W*	PBT-GF15	NOIR *BLACK*	1.47g
		2	See Coding Table	N (02)	PPI0000492	M	33522709	01	1	LEVIER DE VERROUILLAGE PORTE-CLIPS 12 VOIES *LEVER 12W*	PBT-GF15	NOIR *BLACK*	3.29g
		1			See Coding Table	N (02)	See Coding Table	02 (02)	1	BOITIER PORTE-MODULE 12 VOIES SORTIE 0° *FEMALE HOUSING 12W ROUTING 0°*	PBT-GF15	see coding table	
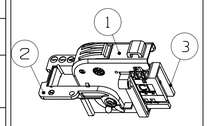	90°	3	PPI0000494			L	33500461	01	1	MODULE PORTE-CLIPS 12 VOIES *FEMALE TERMINAL CARRIER 12W*	PBT-GF15	NOIR *BLACK*	1.47g
		2	See Coding Table	N (02)	PPI0000492	M	33522709	01	1	LEVIER DE VERROUILLAGE PORTE-CLIPS 12 VOIES *LEVER 12W*	PBT-GF15	NOIR *BLACK*	3.47g
		1			See Coding Table	N (02)	See Coding Table	02 (02)	1	BOITIER PORTE-MODULE 12 VOIES SORTIE 90° *FEMALE HOUSING 12W ROUTING 90°*	PBT-GF15	see coding table	

(02)

TABLEAU CARACTERISTIQUES / PRESTATIONS ATTENDUES *TABLE OF CHARACTERISTICS / FUNCTIONAL FEATURES REQUESTED*			
LES COTES SERONT CONFIRMEES APRES REALISATION DES AMDECS PRODUIT ET PROCESS DES FOURNISSEURS DU PORTE-CLIPS ET DE L'EMBASE *THE DIMENSIONS WILL BE CONFIRMED AFTER THE RESULT OF DFMEA AND PFMEA OF THE FEMALE CONNECTOR AND INTERFACE SUPPLIERS*			
N° DE LA CARACTERISTIQUE A GARANTIR POUR ASSURER LA PRESTATION *CHARACTERISTIC NBR TO GURANTEE, IN ORDER TO ENSURE THE FUNCTIONAL FEATURE*	PRESTATION ATTENDUE *FUNCTIONAL FEATURES REQUEST*		
	BRANCHEMENT (GUIDAGE ET POLARISATION) *MATING (GUIDING AND POLARIZATION)*	SECURITE DE VERROUILLAGE *CONNECTOR RETENTION*	CONTACT ELECTRIQUE *ELECTRICAL CONTINUITY*
3,4,5	X		X
7		X	X
1,2,13 à 24 - 1,2,13 to 24	X		

DWG STATUS					ZONE	REVISION HISTORY	AUTH	DR	APVD 1	APVD 2
DATE	STG	REV	N/P	CHG						
31AU21	R	01	-			FILE TRANSLATED FROM MVL SYSTEM		DGL	DGL	DGL
29AU22	R	02	-			REDRAWN IN NX SEE MVL PCC0051195 REV F FOR PREVIOUS CHANGES CODING PART REVISION N WAS M APTIV REFERENCE ADDED SHEET 02 ADDED		K.GOW	S.SEL	J.MOI

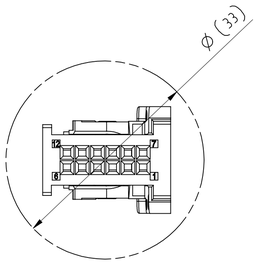

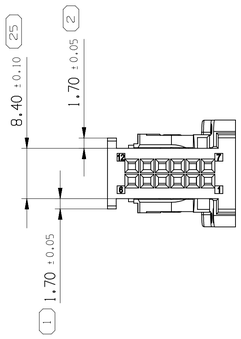

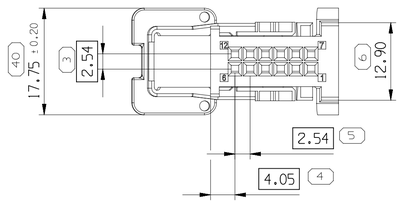

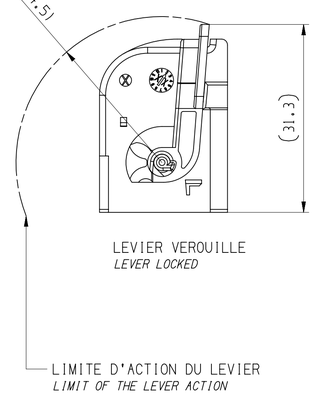

LEVIER VEROUILLE
LEVER LOCKED

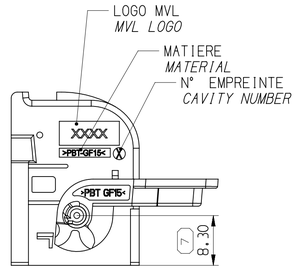

LEVIER EN POSITION DE LEVRAISON
LEVER IN DELIVERY POSITION

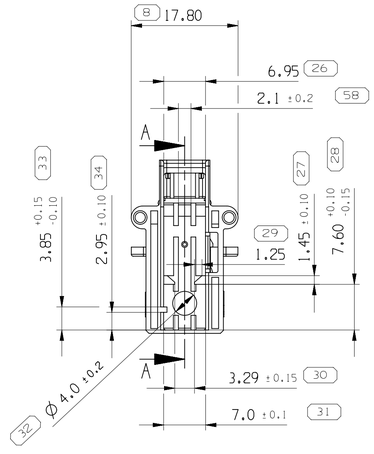

COUPE A-A

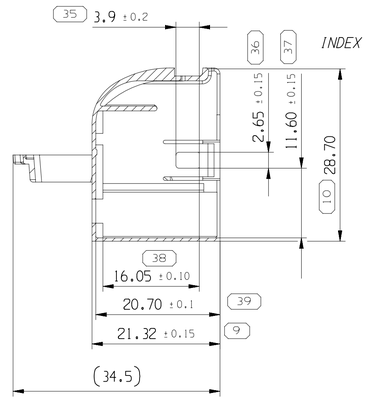

DATEUR
DATE INDICATOR

INDICE
INDEX NUMBER

VERSION 90°

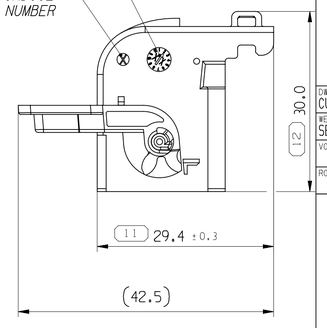

A LINE DRAWN THROUGH A PART NUMBER INDICATES THAT PHYSICAL PARTS ARE NOT AVAILABLE FOR ORDERING.

PART NUMBERS THAT DO NOT HAVE A LINE PRESENT INDICATE THAT PHYSICAL PARTS ARE AVAILABLE FOR ORDERING.

CONTACT APTIV SALES TO ASSURE AVAILABILITY OF PARTS.

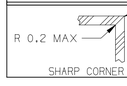

SHARP CORNER TOLERANCE

DIM TO CHECK
( ) DIM FOR HELP
THEORETIC DIM

ISOMETRIC VIEW

ROUTING 0°

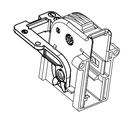

ROUTING 90°

SCALE 1:1

DWG TYP
CUSTOMER PART DRAWING

WEIGHT (GR): SEE TABLE
VOLUME (CM³)
ROUTING
DISTR CODE: D

UNLESS OTHERWISE SPECIFIED

GENERAL TOLERANCES ACCORDING TO: NFT 58000 Cat.4 normale

GD&T ACCORDING TO:

REFERENCE
PCC0051195

FIRST ANGLE PROJECTION

DO NOT SCALE
USE MATH DATA

•APTIV•

CONNECTION SYSTEMS
Chennai, India

COPYRIGHT 2022 APTIV. ALL RIGHTS RESERVED.

THIS DRAWING IS THE PROPERTY OF APTIV AND CONTAINS APTIV CONFIDENTIAL INFORMATION. THE REPRODUCTION, DISTRIBUTION AND UTILIZATION OF THIS DOCUMENT OR ITS RELATED CAD MATH DATA, AS WELL AS COMMUNICATION OF ANY CONTENT TO OTHERS, WITHOUT EXPRESS AUTHORIZATION, IS PROHIBITED.

CE PLAN EST LE PROPRIETE DE APTIV ET CONTIENT DES INFORMATIONS APTIV CONFIDENTIELLES. LA REPRODUCTION, LA DISTRIBUTION ET L'UTILISATION DE CE DOCUMENT OU DE SES DONNÉES MATHÉMATIQUES CAO, AINSI QUE LA COMMUNICATION DE TOUT CONTENU À AUTRUI, SANS AUTORISATION EXPRESSE EST INTERDITE.

		DATE
DR	P DAUDIN	12SE05
APVD1	F FAURIE	14MY13
APVD2	S LACOTE	04JL13
APVD3	PASCAL MENARD	04JL13
APVD4		
APVD5		

SUBSTANCES OF CONCERN AND RECYCLED CONTENT PER APTIV 10949001
MATIERES PROSCRITES ET CONTENU RECYCLABLE SELON APTIV 10949001

MATERIAL
SEE TABLE

DRAWING NAME
12W FEMALE CONNECTOR
12W DUO-TWIN/MOX/MQS COMPATIBLE
13936169-CUS02

DRAWING NUMBER
13936169

SIZE	SCALE	FRAME NO	SHEET NO	STG	REV	N/P
A1	2:1	1 OF 1	1 OF 2	R	02	-

User: q2ebxk
Part: 13936169-CUS02_S01/02 Date: 30-Sep-22 Time: 17:01:28
Page: 1 of 2 (13936169.prt,1;30,1|0|pass,GUS

						CODAGE/*CODING*			
REFERENCE MVL DU PORTE CLIPS *MVL FEMALE CONNECTOR PART NUMBER*						PPI0000561	PPI0000554	PPI0000553	
INDICE ARTICLE *REVISION PART NUMBER*						N	N	N	02
REFERENCE APTIV DU PORTE CLIPS *APTIV FEMALE CONNECTOR PART NUMBER*						33500466	33500463	13741941	02
INDICE ARTICLE *REVISION PART NUMBER*						02	02	02	02
SCALE 1:1 02					VERSION 0°	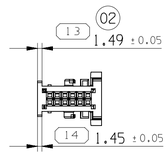	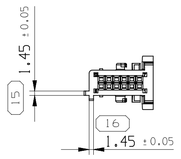	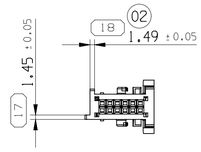	
1	PORTE-MODULE *FEMALE HOUSING*	NOIR *BLACK*	PPI0000559	33522713		X			
		BLEU *BLUE*	PPI0000549	33522711				X	
		MARRON *BROWN*	PPI0000550	33522712			X		
2	LEVIER *LEVER*	NOIR *BLACK*	PPI0000492	33522709		X	X	X	
REP.	DESIGNATION *DESIGNATION*	COULEUR *COLOUR*	REF MVL *MVL P/N*	REF APTIV *APTIV P/N*					

						CODAGE/*CODING*			
REFERENCE MVL DU PORTE CLIPS *MVL FEMALE CONNECTOR PART NUMBER*						PPI0000562	PPI0000555	PPI0000493	
INDICE ARTICLE *REVISION PART NUMBER*						N	N	N	02
REFERENCE APTIV DU PORTE CLIPS *APTIV FEMALE CONNECTOR PART NUMBER*						33500467	33500464	33500460	02
INDICE ARTICLE *REVISION PART NUMBER*						02	02	02	02
SCALE 1:1 02					VERSION 90°	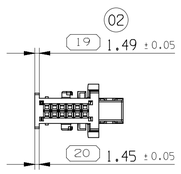	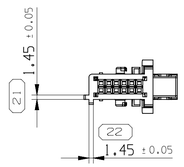	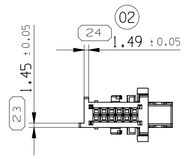	
1	PORTE-MODULE *FEMALE HOUSING*	NOIR *BLACK*	PPI0000560	33522715		X			
		BLEU *BLUE*	PPI0000547	33522710				X	
		MARRON *BROWN*	PPI0000491	33522714			X		
2	LEVIER *LEVER*	NOIR *BLACK*	PPI0000492	33522709		X	X	X	
REP.	DESIGNATION *DESIGNATION*	COULEUR *COLOUR*	REF MVL *MVL P/N*	REF APTIV *APTIV P/N*					

DWG STATUS					ZONE	REVISION HISTORY	AUTH	DR	APVD 1	APVD 2
DATE	STG	REV	N/P	CHG						
29AU22	R	02	-			SEE SHEET 01 DIMENSION NO 13,18,19,24 UPDATED PART REVISION UPDATED		K.GOW	S.SEL	J.MOI

A LINE DRAWN THROUGH A PART NUMBER INDICATES THAT PHYSICAL PARTS ARE NOT AVAILABLE FOR ORDERING.

PART NUMBERS THAT DO NOT HAVE A LINE PRESENT INDICATE THAT PHYSICAL PARTS ARE AVAILABLE FOR ORDERING.

CONTACT APTIV SALES TO ASSURE AVAILABILITY OF PARTS.

SHARP CORNER TOLERANCE

DIM TO CHECK
( ) DIM FOR HELP
THEORETIC DIM

DWG TYP
CUSTOMER PART DRAWING

WEIGHT (GR): SEE TABLE
VOLUME (CM³):
ROUTING:
DISTR CODE: D

UNLESS OTHERWISE SPECIFIED

GENERAL TOLERANCES ACCORDING TO: NFT 58000 Cat.4 normale

GD&T ACCORDING TO:

REFERENCE PCC0051195

FIRST ANGLE PROJECTION

DO NOT SCALE
USE MATH DATA

CAD NX

•APTIV•

CONNECTION SYSTEMS
Chennai, India

COPYRIGHT 2022 APTIV. ALL RIGHTS RESERVED.

THIS DRAWING IS THE PROPERTY OF APTIV AND CONTAINS APTIV CONFIDENTIAL INFORMATION. THE REPRODUCTION, DISTRIBUTION AND UTILIZATION OF THIS DOCUMENT OR ITS RELATED CAD MATH DATA, AS WELL AS COMMUNICATION OF ANY CONTENT TO OTHERS, WITHOUT EXPRESS AUTHORIZATION, IS PROHIBITED.

CE PLAN EST LE PROPRIETE DE APTIV ET CONTIENT DES INFORMATIONS APTIV CONFIDENTIELLES. LA REPRODUCTION, LA DISTRIBUTION ET L'UTILISATION DE CE DOCUMENT OU DE SES DONNÉES MATHÉMATIQUES CAO, AINSI QUE LA COMMUNICATION DE TOUT CONTENU À AUTRUI, SANS AUTORISATION EXPRESSE EST INTERDITE.

		DATE
DR	P DAUDIN	12SE05
APVD1	F FAURIE	14MY13
APVD2	S LACOTE	04JL13
APVD3	PASCAL MENARD	04JL13
APVD4		
APVD5		

SUBSTANCES OF CONCERN AND RECYCLED CONTENT PER APTIV 10949001
MATIERES PROSCRITES ET CONTENU RECYCLABLE SELON APTIV 10949001

MATERIAL: SEE TABLE

DRAWING NAME
12W FEMALE CONNECTOR
12W DUO-TWIN/MOX/MQS COMPATIBLE
13936169-CUS02

DRAWING NUMBER
13936169

SIZE	SCALE	FRAME NO	SHEET NO	STG	REV	N/P
A1	2:1	1 OF 1	2 OF 2	R	02	-

User: q28bxk
Part: 13936169 CUS02_SOC02
Design: 13936169_CUS02_SOC02.prt
Date: 30-Sep-22 Time: 17:02:59