DELIVERY STATE
FROM CONNECTOR MAKER
TO HARNESS MAKER

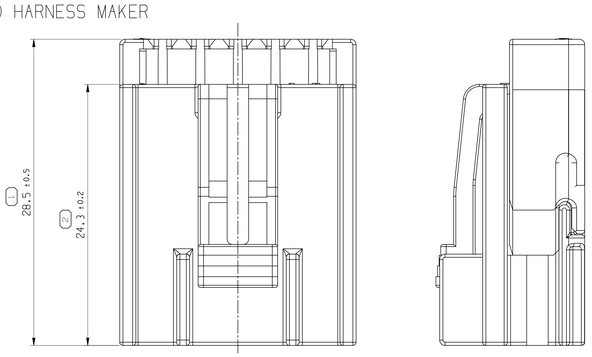

DELIVERY STATE
FROM HARNESS MAKER
TO CAR MAKER

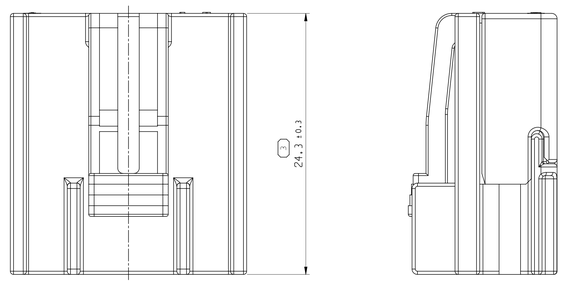

SYMBOL DEFINITION		
A DIMENSION WITHOUT AN INSPECTION REPORT SYMBOL (▭) OR (▭) DOES NOT REQUIRE INSPECTION. IT MAY BE CONTROLLED ON THE INDIVIDUAL COMPONENT DRAWING.	TOTAL NO OF INSPECTIONS REQUIRED	21
(▭) INDICATES THE DIMENSION IS SHOWN ON THE PART DRAWING AND THE TOOL MUST BE QUALIFIED AT 80% OF THE TOLERANCE SHOWN UNLESS SUPERSEDED BY A "TBT".	LAST NO. USED	20

MISSING SYMBOLS
NO MISSING SYMBOL NUMBER

DWG STATUS					ZONE	REVISION HISTORY	AUTH	DR	APVD 1	APVD 2
DATE	STG	REV	N/P	CHG						
23APR18	R	01	-	-		REDRAWN IN NX		KDH	SJW	PJH

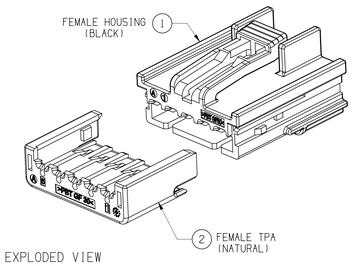

EXPLODED VIEW
SCALE 5:1

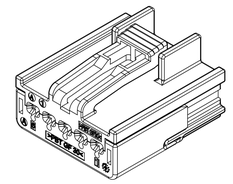

ISOMETRIC VIEW
SCALE 5:1

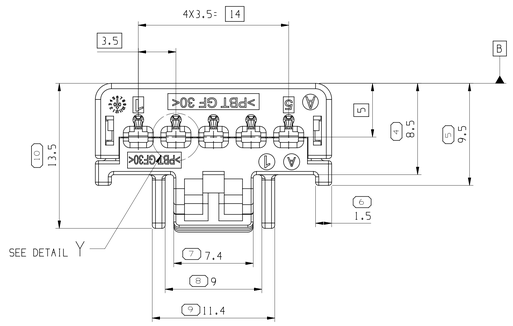

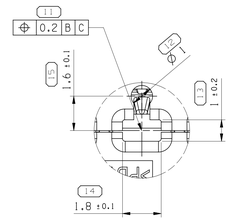

DETAIL Y
SCALE 10:1

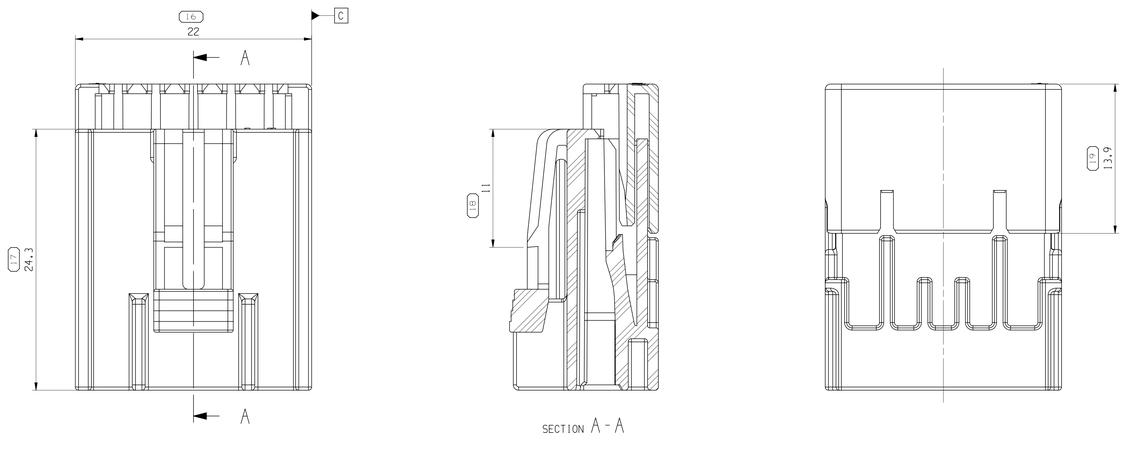

SECTION A - A

ASSEMBLY P/NO		(1) FEMALE HOUSING (BLACK)			(2) FEMALE TPA (NATURAL)		
		P/NO		MATERIAL	P/NO		MATERIAL
MVL	DELPHI	MVL	DELPHI		MVL	DELPHI	
F383100	33503439	S581300	33525857	PBT GF30	S681300	33525858	PBT GF30

ASSOCIATED PARTS							
FEMALE TERMINALS		PART NUMBER	WIRE SIZE (mm²)	TYPE	PART NUMBER	WIRE SIZE (mm²)	TYPE
Apex150	Tin plating	54002000	0.3 - 0.5	0.8 X 1.5	-	0.3 - 0.5	0.8 X 1.5
	Gold plating	54002002			-		
	Tin plating	54001625	0.75 - 1.0	0.8 X 1.5	-	0.75 - 1.0	0.8 X 1.5
	Gold plating	54001627			-		
CAVITY PLUG FOR Apex150		54241629	CAVITY PLUG (0.3 - 1.0 SQmm)		-	-	
DESCRIPTION		DELPHI PART NUMBER			CUSTOMER PART NUMBER		

DIN ISO 2768	Tolerance Class medium (m)						
Linear Dimensions except for broken edges	Permissible deviations for basic size range (mm)						
	0.5 *) up to 3	over 3 up to 6	over 6 up to 30	over 30 up to 120	over 120 up to 400	over 400 up to 1000	over 1000 up to 2000
	±0.1	±0.1	±0.2	±0.3	±0.5	±0.8	±1.2
Broken edges (radii, chamfers)	Permissible deviations for basic size range (mm)						
	0.5 *) up to 3		over 3 up to 6		over 6		
	±0.2		±0.5		±1		
Angular dimensions	Permissible deviations for ranges of lengths, in mm, of the shorter side of the angle concerned						
	up to 10	over 10 up to 50	over 50 up to 120		over 120 up to 400		over 400
	±1°	±0° 30'	±0° 20'		±0° 10'		±0° 5'
*) For nominal sizes below 0.5mm, the deviations shall be indicated adjacent to the relevant nominal size(s).							

NOTES:

1) AMBIENT TEMPERATURE CLASS:
CLASS 2 (85° C)

2) TEST METHOD PER:
ES91500-00 Rev I UNSEALED CONNECTOR
MS300-34 REV H
MS300-08 REV F

3) ALLOWED WIRE SIZE RANGE:
0.3mm² to 1.0mm² (JASO WIRE)

4) CONNECTOR USED WITH THE FOLLOWING TERMINALS:
DELPHI APEX 150 WITH WIRE SIZES DEFINED IN NOTE

5) NOT SPECIFIED TOLERANCE : DIN ISO 2768M

SHARP CORNER TOLERANCE

DIMENSIONAL RANGE (MM)									CHART E1
FROM	> 0	> 3	> 6	> 30	> 70	> 100	> 150	> 200	> 250	> 300
TO	3	6	30	70	100	150	200	250	300	400
TOLERANCE UNLESS OTHERWISE SPECIFIED										
	±0.15	±0.2	±0.3	±0.4	±0.5	±0.6	±0.7	±1	±1.2	
ANGULAR TOLERANCE ±2°										

DWG TYP
PART DRAWING
WEIGHT (GM)
VOLUME (CM³)
ROUTING
DISTR CODE
D

UNLESS OTHERWISE SPECIFIED

GENERAL TOLERANCES ACCORDING TO:

GD&T ACCORDING TO:

REFERENCE

THIRD ANGLE PROJECTION

DO NOT SCALE

USE MATH DATA

NX

•APTIV•
CONNECTION SYSTEMS
Chennai, India
COPYRIGHT 2018 APTIV. ALL RIGHTS RESERVED.
THIS DRAWING IS THE PROPERTY OF APTIV AND CONTAINS APTIV CONFIDENTIAL INFORMATION. THE REPRODUCTION, DISTRIBUTION AND UTILIZATION OF THIS DOCUMENT OR ITS RELATED CAD MATH DATA, AS WELL AS COMMUNICATION OF ANY CONTENT TO OTHERS, WITHOUT EXPRESS AUTHORIZATION, IS PROHIBITED.

		DATE
DR	KIM, DO-HYEOUNG	23APR18
APVD1	KIM, DO-HYEOUNG	23APR18
APVD2	SEO, JU-WON	23APR18
APVD3	PARK, JOO-HYUN	23APR18
APVD4		
APVD5		

SUBSTANCES OF CONCERN AND RECYCLED CONTENT PER APTIV 10949001

MATERIAL
SEE NOTES

DRAWING NAME
APEX150 SWAY FEMALE UNSEALED CONNECTOR

DRAWING NUMBER
352085 34

SIZE	SCALE	FRAME NO	SHEET NO	STG	REV	N/P
A0	5:1	1 OF 1	1 OF 1	R	01	-

User: KIM, DO-HYEOUNG (KIMDOH2)
Dataset: 352085401_01.prt
Template: 352085401_01.prt
Date: 24-Aug-20 Time: 12:51:27