SYMBOL DEFINITION		
A DIMENSION WITHOUT AN INSPECTION REPORT SYMBOL ( ) DOES NOT REQUIRE INSPECTION. IT MAY BE CONTROLLED ON THE INDIVIDUAL COMPONENT DRAWING.	TOTAL NO OF INSPECTIONS REQUIRED	25
	LAST NO. USED	20

MISSING SYMBOLS

NO MISSING SYMBOL NUMBER

DWG STATUS					ZONE	REVISION HISTORY	AUTH	DR	APVD 1	APVD 2
DATE	STG	REV	N/P	CHG						
16DE10	R	01	-	-		ALL PARTS-CREATED PART DRAWING 13861575 WAS 13739593,REVISED & RELEASED 13861576 WAS 13739594,REVISED & RELEASED 13861577 WAS 13766032,REVISED & RELEASED	412702	LLJ	LLJ	JN
31MY23	R	02	-	-		REVISED GRAPHICS	560546	CS	DL	LAR

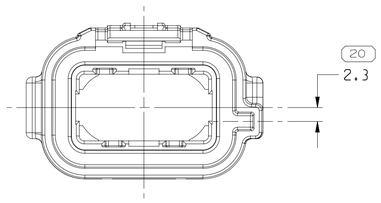

TYPE 103
SAME AS TYPE 101
EXCEPT AS SHOWN

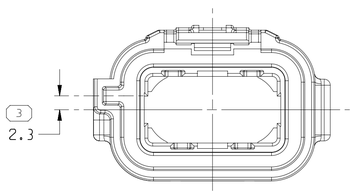

TYPE 102
SAME AS TYPE 101
EXCEPT AS SHOWN

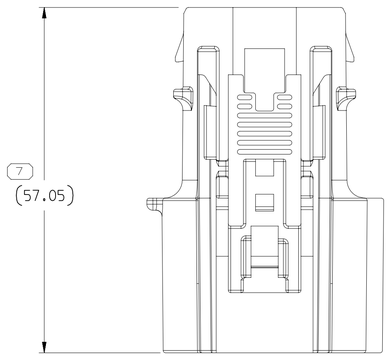

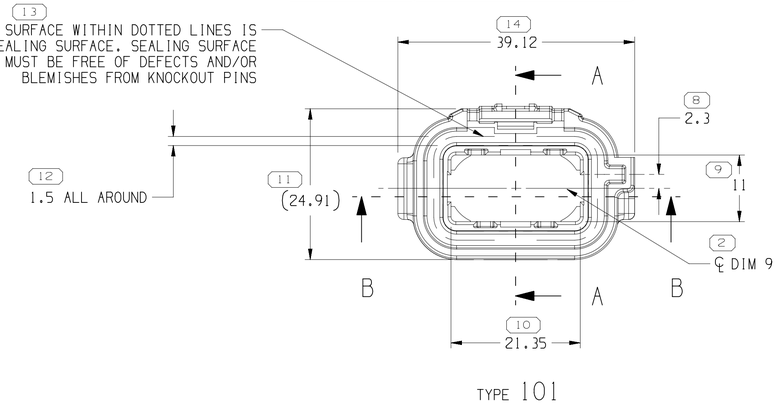

TYPE 101

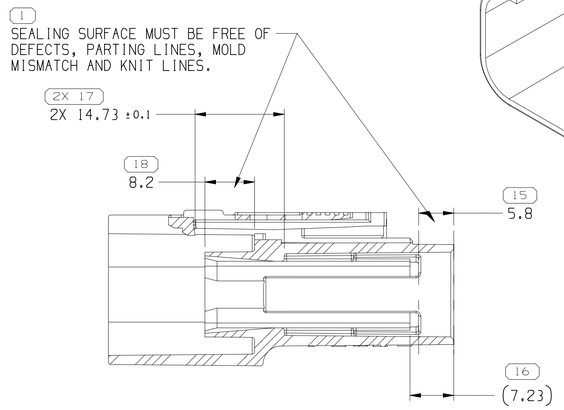

SECTION A-A

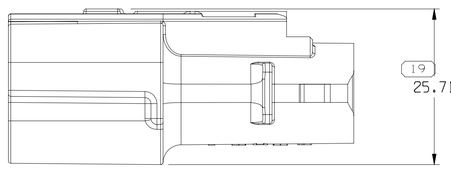

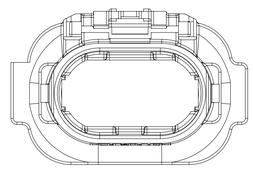

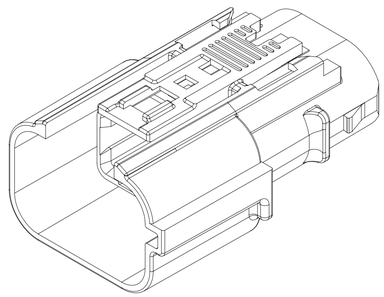

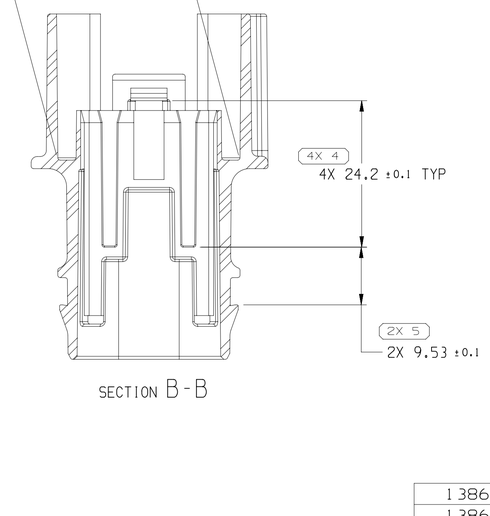

SECTION B-B

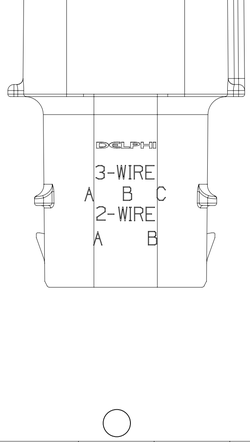

NOTES

1. UNLESS OTHERWISE SPECIFIED AND/OR INDICATED:

   DIMENSIONS ARE TO FACE OF VIEW SHOWN AND AUTOMATICALLY ROUNDED BY COMPUTER FOR INSPECTION (SEE MATH MODEL FOR PRECISE DIMENSIONS). FOR ALL OTHER DIMENSIONS NOT SHOWN BUT REQUIRED FOR TOOL BUILD, SEE MATH MODEL FOR PRECISE TOOL PATH DATA.

2. PARTS SHOWN ON THIS DRAWING USED IN ASSEMBLIES SHOWN ON TAXI 13861583.

3. (1)X(0.1) DELPHI CORPORATE BRAND TO BE LOCATED AS SHOWN

4. THESE PARTS ACCEPT INNER CONNECTOR 13737711 WITH 13737712 SHIELD (2 PLCS) OR 13737740 INNER CONN WITH NO SHIELD OR EQUIVALENT.

5. THIS PRODUCT IS NOT CATEGORIZED AS AN APPEARANCE ITEM, MINOR IMPERFECTIONS INCLUDING, BUT NOT LIMITED TO, FLOW MARKS, COLOR BLEMISHES, GATE VESTIGE, AND SOFT FLASH THAT DO NOT AFFECT THE FIT, FORM, OR FUNCTION OF THE PART ARE PERMISSIBLE PER DPNP-4.7-CS-01.

PART NUMBER	REV	N/P	STATUS	TYPE	MAT'L SPEC & COLOR	VOLUME CM³
13861577	02	-	-	103	POLYESTER COMPOUND ORANGE	10.203
13861576	02	-	-	102	POLYESTER COMPOUND ORANGE	10.203
13861575	02	-	-	101	POLYESTER COMPOUND ORANGE	10.203

10 PROCESS SENSITIVE DIMENSION

DIMENSIONS ENCLOSED IN ( ) INDICATE REFERENCE DIMENSIONS AND NO TOLERANCE LIMITS ARE ESTABLISHED

DIMENSIONAL RANGE (MM)								CHART E1
FROM	> 0	> 20	> 30	> 70	>100	>150	>200	>250	>300
TO	20	30	70	100	150	200	250	300	400
TOLERANCE UNLESS OTHERWISE SPECIFIED									
	±0.15	±0.2	±0.3	±0.4	±0.5	±0.6	±0.8	±1	±1.2
ANGULAR TOLERANCE ±2°									

A ⁄ LINE DRAWN THROUGH A PART NUMBER INDICATES THAT PHYSICAL PARTS ARE NOT AVAILABLE FOR ORDERING.

PART NUMBERS THAT DO NOT HAVE A LINE PRESENT INDICATE THAT PHYSICAL PARTS ARE AVAILABLE FOR ORDERING.

CONTACT APTIV SALES TO ASSURE AVAILABILITY OF PARTS.

DWG TYPE: PART DRAWING

STYLE

VOLUME (CM³) | DISTR CODE: D

UNLESS OTHERWISE SPECIFIED

THIS DOCUMENT IS IN ACCORDANCE WITH ASME Y14.5M-1994 AS AMENDED BY THE GM GLOBAL DIMENSIONING AND TOLERANCING ADDENDUM-2001. SEPARATE PATTERNS OF FEATURES MAY BE GAGED SEPARATELY REGARDLESS OF DATUM REFERENCES.

ALL DIMENSIONS ARE IN MILLIMETERS

REFERENCE

THIRD ANGLE PROJECTION

DO NOT SCALE

USE MATH DATA

CAD NX

•APTIV•

CONNECTION SYSTEMS

Chennai, India

COPYRIGHT 2010 APTIV. ALL RIGHTS RESERVED.

THIS DRAWING IS THE PROPERTY OF APTIV AND CONTAINS APTIV CONFIDENTIAL INFORMATION. THE REPRODUCTION, DISTRIBUTION AND UTILIZATION OF THIS DOCUMENT OR ITS RELATED CAD MATH DATA, AS WELL AS COMMUNICATION OF ANY CONTENT TO OTHERS, WITHOUT EXPRESS AUTHORIZATION, IS PROHIBITED.

	DATE
DR	
APVD1 L. JONES	16DE10
APVD2 L. JONES	16DE10
APVD3 JAMES NESTOR	16DE10
APVD4	
APVD5	

SUBSTANCES OF CONCERN AND RECYCLED CONTENT PER APTIV 10949001

MATERIAL: SEE DRAWING

DRAWING NAME: TAXI ASM COV HOUSING

DRAWING NUMBER: 13861578

SIZE	SCALE	FRAME NO	SHEET NO	STG	REV	N/P
A1	2:1	1 OF 1	1 OF 1	R	02	-

User: wxmzm
Plot: 13861578-CU501-501/02 Date: 04-Jul-23 Time: 16:47:07
wxmzm,070402023,23145,169pass,nor,wxmzm