

ECHELLE 1:1

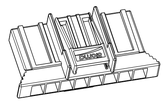

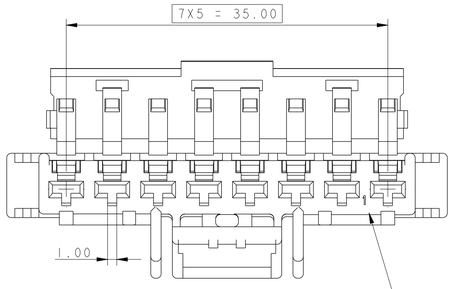

CODAGE PORTE-CLIPS *FEMALE CONNECTOR'S CODING*				
COUPE P-P ECHELLE 1:1		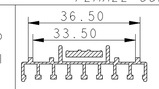	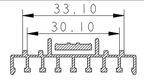	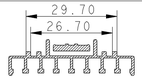
		36.50 / 33.50	33.10 / 30.10	29.70 / 26.70
MVL	REF. *REF.*	211 PC 08 3 S 0 017	211 PC 08 3 S 8 017	211 PC 08 3 S 1 017
	REV. *IND.*	B	B	B
DELPHI	REF. *REF.*	10820381	33500313	33500312
	REV. *IND.*	01	01	01
COULEUR *COLOR*		NOIR *BLACK*	GRIS *GREY*	MARRON *BROWN*

COUPE B-B

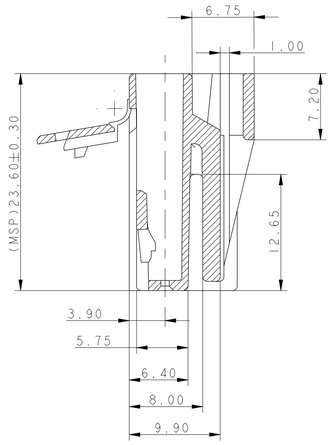

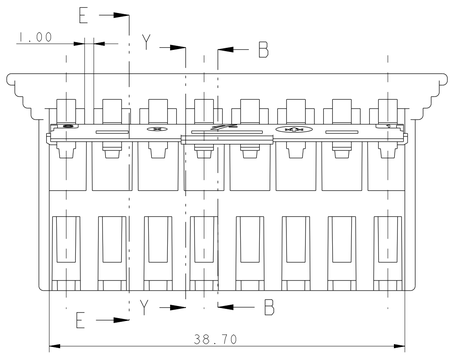

COUPE E-E

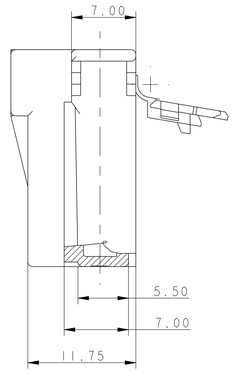

COUPE Y-Y

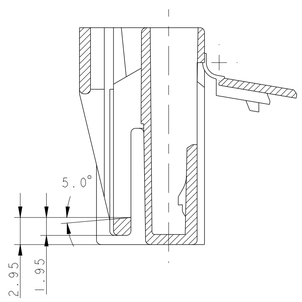

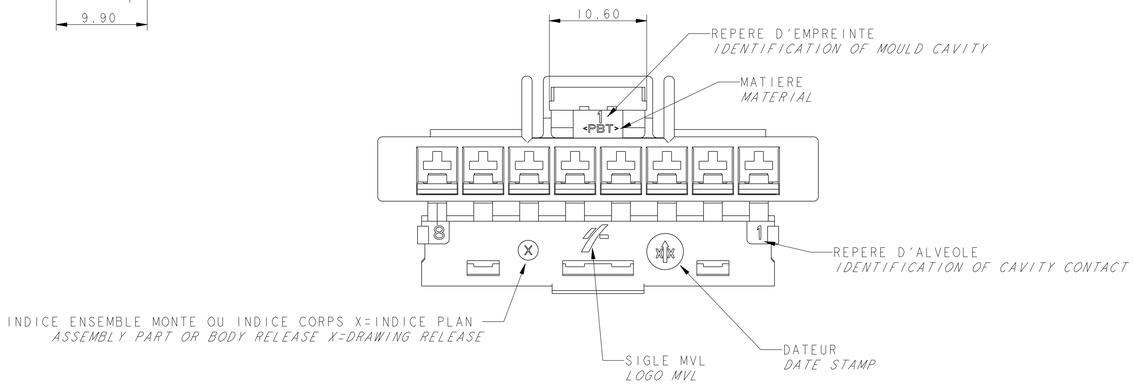

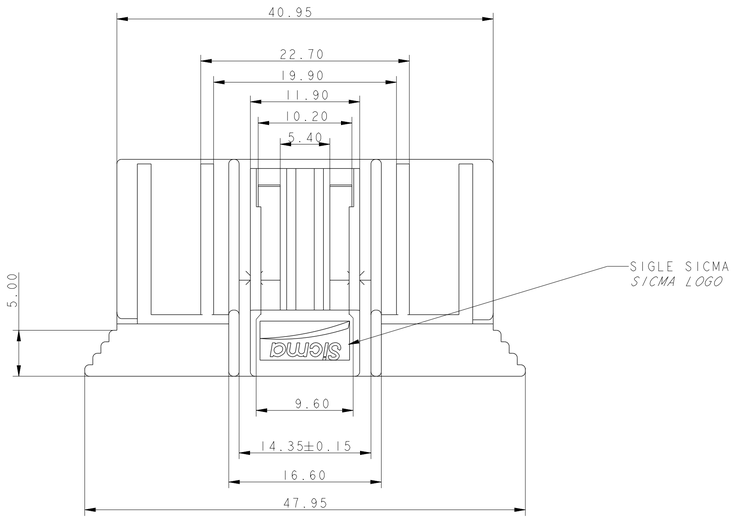

-	-	-
-	-	-
-	-	-
-	-	-
-	-	DELPHI P/N ADDED
ECN NO. *NUMERO ECN*	POSITION *POSITION*	CHANGE DESCRIPTION *MODIFICATION*

PRODUCT SPEC. *SPECIF. PRODUIT*	PACKAGING SPEC. *SPECIF. EMBALLAGE*	APPLICATION SPEC. *SPECIF. APPLICATION*
-	-	-

COPYRIGHT DELPHI CORPORATION AND/OR ITS AFFILIATES. ALL RIGHTS RESERVED. REVISED
THIS DRAWING IS THE PROPERTY OF DELPHI CORPORATION AND CONTAINS DELPHI CONFIDENTIAL INFORMATION. THE REPRODUCTION, DISTRIBUTION AND UTILIZATION OF THIS DOCUMENT OR ITS RELATED CAD WHITH DATA, AS WELL AS COMMUNICATION OF ANY CONTEN TO OTHERS, WITHOUT EXPRESS AUTHORIZATION, IS PROHIBITED.
CE PLAN EST LA PROPRIETE DE DELPHI CORPORATION ET CONTIENT DES INFORMATIONS DELPHI CONFIDENTIELLES. LA REPRODUCTION, LA DISTRIBUTION ET L'UTILISATION DE CE DOCUMENT OU DE SES DONNEES MATHEMATIQUES CAO, AINSI QUE LA COMMUNICATION DE TOUT CONTENU À AUTRUI, SANS AUTORISATION EXPRESSE, EST INTERDITE.

TOLERANCES *TOLERANCES*	±0.2 ±2° -	MATERIAL : *MATIERE :*	PBT
COUNTERPART N° *CONTRE-PARTIE N°*	-	SURFACE FINISH *ETAT DE SURFACE*	-
DO NOT MEASURE DRAWING *NE PAS PRENDRE DE COTES*		COLOUR : *COULEUR :*	SEE TABLE
		TOOL NO. *OUTIL N°*	-
		ECO Loc. Code *CODE B.E.*	FE

DELPHI
DELPHI PACKARD ELECTRICAL/ELECTRONIC ARCHITECTURE
EPERNON, FRANCE

C | ISO PROJECTION *PROJECTION ISO* | DIMENSION IN MILLIMETERS *DIMENSIONS EN MILLIMETRES*

CAD SYSTEM
pro / eng.
DWG SIZE *FORMAT*
A1

	DATE	NAME *NOM*
CREATED BY *CREE PAR*	2002/04/18	ISAMBERT
MODIFIED BY *MODIF. PAR*	2013/07/09	F.FAURE
CHECKED BY *VERIF. PAR*	2013/07/10	S.LACOTE
APPROVED BY *APPR. PAR*	2013/07/10	L.LETHIER
FILE NAME *NOM DE FICHIER*	211FT0457	

TITLE *DESIGNATION*
2.8 x 0.8
8 WAYS FEMALE HOUSING

PROJECT *PROJECT*
ESR NO. *NUMERO ESR* ITA-2058
DOCUMENT UNDER PDS CONTROL *DOCUMENT GERE SOUS P.D.T.*
NO MODIFICATION ALLOWED OUTSIDE *PAS DE MODIFICATION EN DEHORS*

DRAWING NUMBER *REF. PLAN* 211FT0457 REV. *IND.* C
STATE *ETAT* SERIAL RELEASED
PART NUMBER *REF. ARTICLE* See Table REV. *IND.* -
CAT. NO. *NUMERO CAT.*

APPROVAL LEVEL *NIV. D'APPROBATION* A
SHEET *FEUILLE* 1 of / sur 1
SCALE *ECH.* 2:1

EUR C04 112 F29