SYMBOL DEFINITION		
A DIMENSION WITHOUT AN INSPECTION REPORT SYMBOL (▭) DOES NOT REQUIRE INSPECTION. IT MAY BE CONTROLLED ON THE INDIVIDUAL COMPONENT DRAWING.	TOTAL NO OF INSPECTIONS REQUIRED	12
	LAST NO. USED	8

MISSING SYMBOLS
NO MISSING SYMBOL NUMBER

DWG STATUS					ZONE	REVISION HISTORY	AUTH	DR	APVD 1	APVD 2
DATE	STG	REV	N/P	CHG						
18FE21	R	01	-	-		RELEASED PART DRAWING	49931	VN	MP	RS
24MY21	R	02	-	-		REVISED GRAPHICS		VM	MP	RS
24JN22	R	02	AA	-	C8	DIM.6 TOLERANCE ADDED	447999	KAV	LZ	ZJ

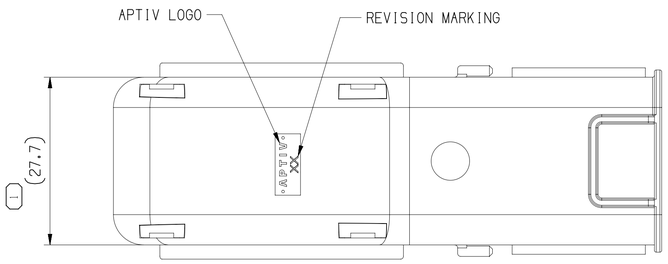

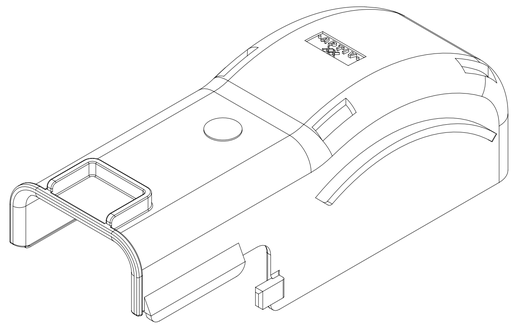

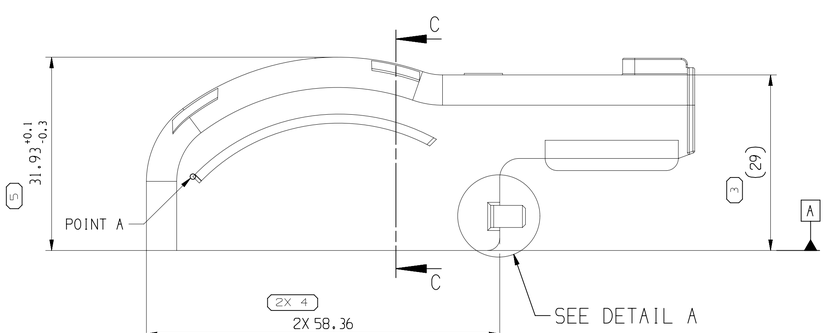

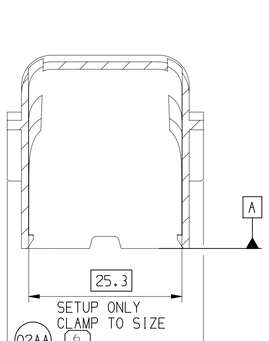

SECTION C-C

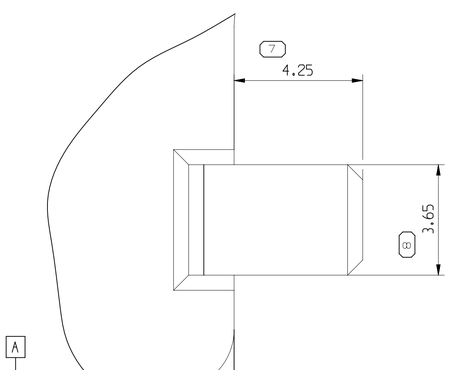

DETAIL A
SCALE 10:1

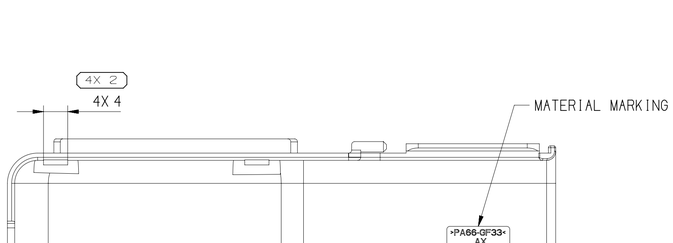

NOTES

1. UNLESS OTHERWISE SPECIFIED AND/OR INDICATED:

   DIMENSIONS ARE TO FACE OF VIEW SHOWN AND AUTOMATICALLY ROUNDED BY COMPUTER FOR INSPECTION (SEE MATH MODEL FOR PRECISE DIMENSIONS). FOR ALL OTHER DIMENSIONS NOT SHOWN BUT REQUIRED FOR TOOL BUILD, SEE MATH MODEL FOR PRECISE TOOL PATH DATA.

2. THIS PART USED IN ASSEMBLY : 35448231, 35448232, 35450731, 35450732, 35450733 & 35450734

3. PARTS SHOWN ON THIS DRAWING USED IN ASSEMBLIES SHOWN ON TAXI : 35448229 & 35450730

4. COLOR : BLACK

6 PROCESS SENSITIVE DIMENSION

DIMENSIONS ENCLOSED IN ( ) INDICATE REFERENCE DIMENSIONS AND NO TOLERANCE LIMITS ARE ESTABLISHED

DIMENSIONAL RANGE (MM)									CHART E1
FROM TO	> 0 20	> 20 30	> 30 70	> 70 100	>100 150	>150 200	>200 250	>250 300	>300 400
TOLERANCE UNLESS OTHERWISE SPECIFIED	±0.15	±0.2	±0.3	±0.4	±0.5	±0.6	±0.8	±1	±1.2
ANGULAR TOLERANCE ±2°									

A ⁄ LINE DRAWN THROUGH A PART NUMBER INDICATES THAT PHYSICAL PARTS ARE NOT AVAILABLE FOR ORDERING.

PART NUMBERS THAT DO NOT HAVE A LINE PRESENT INDICATE THAT PHYSICAL PARTS ARE AVAILABLE FOR ORDERING.

CONTACT APTIV SALES TO ASSURE AVAILABILITY OF PARTS.

DWG TYPE: PART DRAWING

STYLE:

VOLUME (CM³): 8.477

DISTR CODE:

UNLESS OTHERWISE SPECIFIED
THIS DOCUMENT IS IN ACCORDANCE WITH ASME Y14.5-2009. SEE APTIV ENGINEERING DESIGN STANDARD B6 2017 FOR ISO 1101:2004 RECONCILIATION REQUIREMENTS.

ALL DIMENSIONS ARE IN MILLIMETERS

REFERENCE: 13697648

THIRD ANGLE PROJECTION

DO NOT SCALE
USE MATH DATA

CAD NX

•APTIV•

CONNECTION SYSTEMS
Chennai, India

COPYRIGHT 2021 APTIV. ALL RIGHTS RESERVED.

THIS DRAWING IS THE PROPERTY OF APTIV AND CONTAINS APTIV CONFIDENTIAL INFORMATION. THE REPRODUCTION, DISTRIBUTION AND UTILIZATION OF THIS DOCUMENT OR ITS RELATED CAD MATH DATA, AS WELL AS COMMUNICATION OF ANY CONTENT TO OTHERS, WITHOUT EXPRESS AUTHORIZATION, IS PROHIBITED.

		DATE
DR	VETRIVEL N	18FE21
APVD1	VENKATESAN M	18FE21
APVD2	MAHADEVAN P	18FE21
APVD3	RANGARAJAN S	18FE21
APVD4		
APVD5		

SUBSTANCES OF CONCERN AND RECYCLED CONT 10949001 10949001

MATERIAL: POLYAMIDE COMPOUND

DRAWING NAME: COV WIRE DRESS

DRAWING NUMBER: 35538953

SIZE	SCALE	FRAME NO	SHEET NO	STG	REV	N/P
A1	2:1	1 OF 1	1 OF 1	R	02	AA

User: ZJOBS
Path: C:\JOBS\35538953\CUSTOL\02AA Date: 01-Jul-22 Time: 13:02:45
Model: 35538953_CUSTOL_02AA_07012022_090131_84passes.prt