SYMBOL DEFINITION		
A DIMENSION WITHOUT AN INSPECTION REPORT SYMBOL ( ) DOES NOT REQUIRE INSPECTION. IT MAY BE CONTROLLED ON THE INDIVIDUAL COMPONENT DRAWING.	TOTAL NO OF INSPECTIONS REQUIRED	16
	LAST NO. USED	16

MISSING SYMBOLS
NO MISSING SYMBOL NUMBER

DWG STATUS					ZONE	REVISION HISTORY	AUTH	DR	APVD 1	APVD 2
DATE	STG	REV	N/P	CHG						
24DE16	R	01	-	-	-	INITIAL RELEASE	PD17-015	JSY	JJY	PJH
15FE19	R	01	AA	-	-	HOUSING COLOR WAS DARK GRAY SPRING PART NUMBER CHANGED	442684	LJS	SJW	PJH

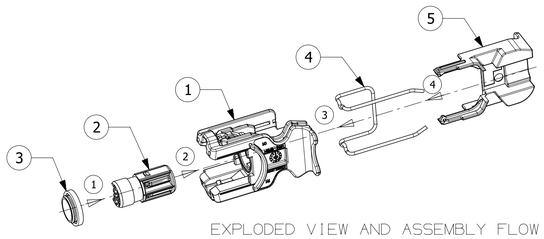

EXPLODED VIEW AND ASSEMBLY FLOW
SCALE 1:1

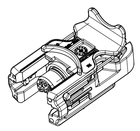

ISOMETRIC VIEW
SCALE 1:1

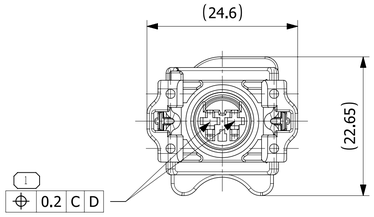

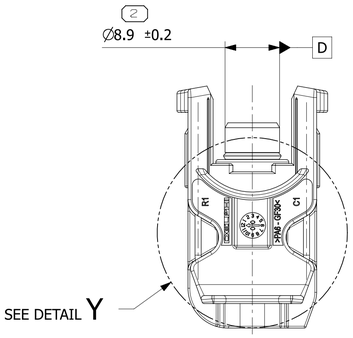

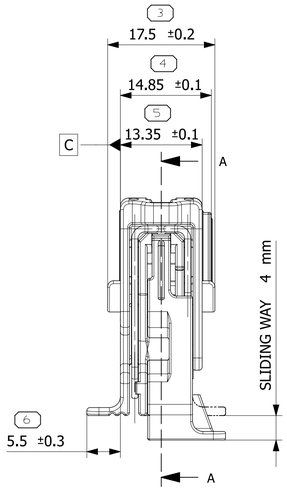

IN H2 AREA
B=B1=12.8 +0.1/-0.2

IN H1 AREA
B=B1=12.8±0.1

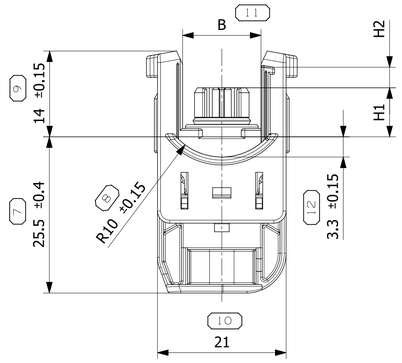

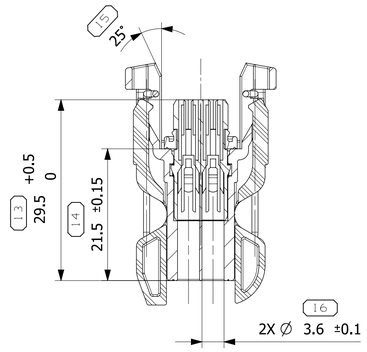

SECTION A-A

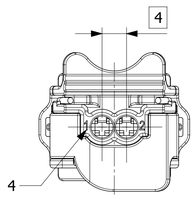

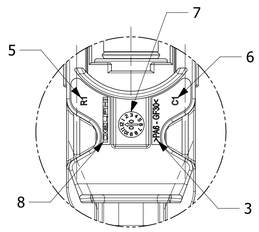

DETAIL Y
SCALE 2:1

ASSOCIATED PARTS				
FEMALE TERMINALS		PART NUMBER	WIRE SIZE(mm²)	TYPE
DCS2 1.5	Au PLATED	6 000 06 34	0.5-1.0	0.6x1.5
DCS 1.5mm SWS (gray)		F410400	0.5-0.85	Insul Ø1.6-1.9mm
DCS 1.5mm SWS (yellow)		F599700	1.0-1.5	Insul Ø2.0-2.4mm
CAVITY PLUG FOR DCK1.5 TERM'L		6 099 39 06	CAVITY PLUG FOR DCS 1.5mm TERM'L	

	POS.	DELPHI P/N	DESCRIPTION	REVISION	MATERIAL	COLOR	QTY.	REMARK
35040235	5	89010138	CPA	C	PA6 GF30	LIGHT GRAY	1	-
	4	33185825	LOCK SPRING	A	SUS	-	1	-
	3	80401413	SEAL	A	SILICONE RUBBER	RED	1	-
	2	80000571	HOUSING INSERT	B	PA6 GF30	BLACK	1	-
	1	35040234	HOUSING	01	PA6 GF30	BLACK	1	-

DIN ISO 2768	Tolerance Class Fine (m)						
Linear Dimensions except for broken edges	Permissible deviations for basic size range (mm)						
	0.5 *) up to 3	over 3 up to 6	over 6 up to 30	over 30 up to 120	over 120 up to 400	over 400 up to 1000	over 1000 up to 2000
	±0.1	±0.1	±0.2	±0.3	±0.5	±0.8	±1.2
Broken edges (radii, chamfers)	Permissible deviations for basic size range (mm)						
	0.5 *) up to 3		over 3 up to 6			over 6	
	±0.2		±0.5			±1	
	Permissible deviations for ranges of lengths, in mm, of the shorter side of the angle concerned						
Angular dimensions	up to 10	over 10 up to 50	over 50 up to 120	over 120 up to 400	over 400		
	± 1°	± 0° 30'	± 0° 20'	± 0° 10'	± 0° 5'		
*) For nominal sizes below 0.5mm, the deviations shall be indicated adjacent to the relevant nominal size(s).							

NOTES

1. TOLERANCE ON: DIN ISO 2768 (m)
2. UNLESS OTHERWISE SPECIFIED TO VENDOR SPECIFICATION
3. MATERIAL MARKING
4. TERMINAL CAVITY NUMBER
5. REVISION INDEX
6. MOLD CAVITY IDENTIFICATION
7. DATE CLOCK
8. DELPHI LOGO

DIMENSION NUMBERS PRECEDED BY AN "•" INDICATES A TBT EXISTS. SEE CHART
TOLERANCES MARKED "TBT" ARE TOOL BUILD TOLERANCES
FOR TOOL QUALIFICATION, SEE THE CURRENT APTIV CONNECTON SYSTEMS SPECIFICATION
( ) PROCESS SENSITIVE DIMENSION
DIMENSIONS ENCLOSED IN ( ) INDICATE REFERENCE DIMENSIONS AND NO TOLERANCE LIMITS ARE ESTABLISHED

SHARP CORNER TOLERANCE

DIMENSIONAL RANGE (MM)									CHART ET
FROM	> 0	> 30	> 70	>100	>150	>200	>250	>300	
TO	20	30	70	100	150	200	250	300	400
TOLERANCE UNLESS OTHERWISE SPECIFIED									
	±0.15	±0.2	±0.3	±0.4	±0.5	±0.6	±0.8	±1	±1.2
ANGULAR TOLERANCE ±2°									

A ⟋ LINE DRAWN THROUGH A PART NUMBER INDICATES THAT PHYSICAL PARTS ARE NOT AVAILABLE FOR ORDERING.

PART NUMBERS THAT DO NOT HAVE A LINE PRESENT INDICATE THAT PHYSICAL PARTS ARE AVAILABLE FOR ORDERING.

CONTACT APTIV SALES TO ASSURE AVAILABILITY OF PARTS.

DWG TYPE: PART DRAWING

STYLE

VOLUME (CM³) | DISTR CODE

UNLESS OTHERWISE SPECIFIED

THIS DOCUMENT IS IN ACCORDANCE WITH ASME Y14.5M-1994 AS AMENDED BY THE GM GLOBAL DIMENSIONING AND TOLERANCING ADDENDUM-2001. SEPARATE PATTERNS OF FEATURES MAY BE GAGED SEPARATELY REGARDLESS OF DATUM REFERENCES.

ALL DIMENSIONS ARE IN MILLIMETERS

REFERENCE

THIRD ANGLE PROJECTION

DO NOT SCALE
USE MATH DATA

CAD NX

•APTIV•

DELPHI PACKARD ELECTRICAL/ELECTRONIC ARCHITECTURE
Chennai, India

COPYRIGHT 2016 DELPHI CORPORATION AND/OR ITS AFFILIATES.
ALL RIGHTS RESERVED.

THIS DRAWING IS THE PROPERTY OF DELPHI CORPORATION AND CONTAINS DELPHI CONFIDENTIAL INFORMATION. THE REPRODUCTION, DISTRIBUTION AND UTILIZATION OF THIS DOCUMENT OR ITS RELATED CAD MATH DATA, AS WELL AS COMMUNICATION OF ANY CONTENT TO OTHERS, WITHOUT EXPRESS AUTHORIZATION, IS PROHIBITED.

	DATE
DR	
APVD1 JEONG,SO-YEON	24DE16
APVD2 JUNG,JAE-YUP	24DE16
APVD3 PARK,JOO-HYUN	24DE16
APVD4	
APVD5	

SUBSTANCES OF CONCERN AND RECYCLED CONTENT PER APTIV 10949001

MATERIAL: SEE TABLE

DRAWING NAME: 2 WAY FEMALE CONNECTOR

DRAWING NUMBER: 35040235

SIZE	SCALE	FRAME NO	SHEET NO	STG	REV	N/P
A1	2:1	1 OF 1	1 OF 1	R	01	AA