DWG STATUS					ZONE	REVISION HISTORY	AUTH	DR	APVD 1	APVD 2
DATE	STG	REV	N/P	CHG						
21MR22	R	01				INITIAL RELEASE		P.BAL	M.LAG	M.LAG

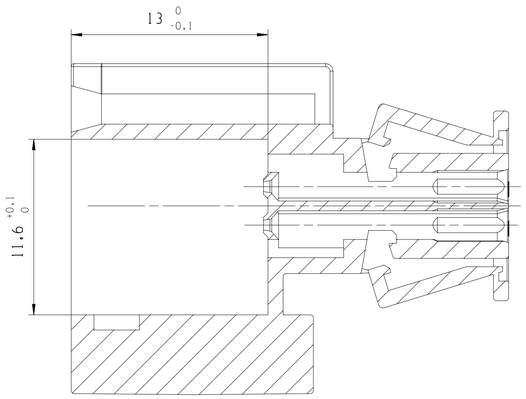

SECTION A-A

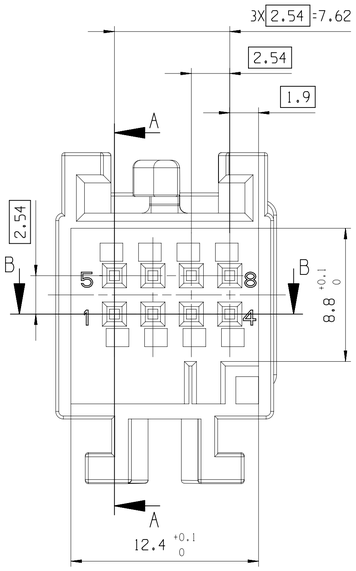

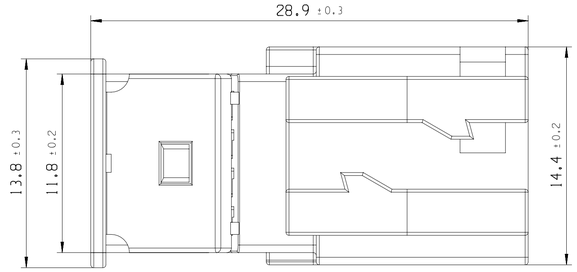

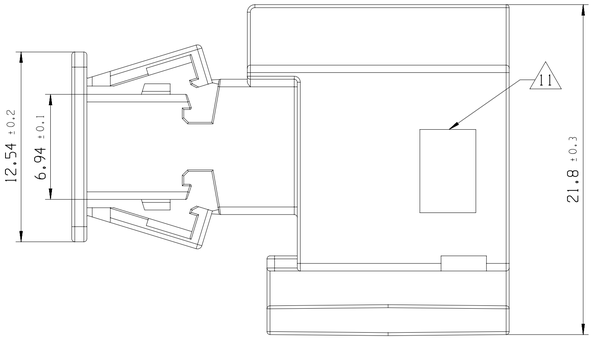

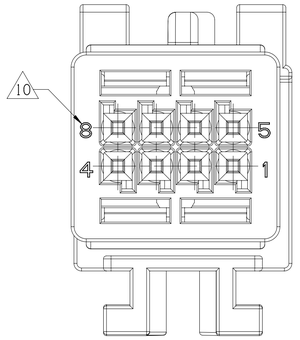

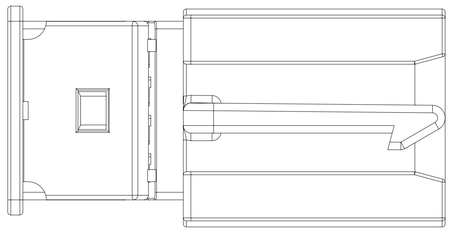

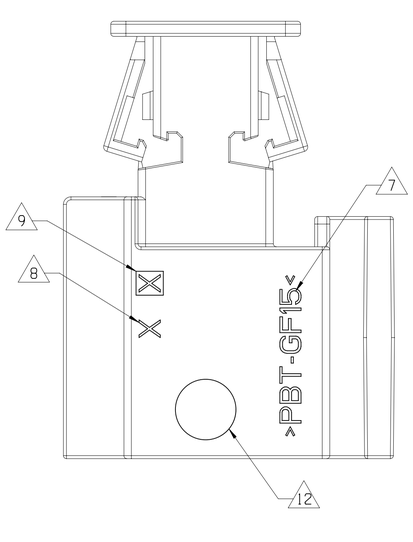

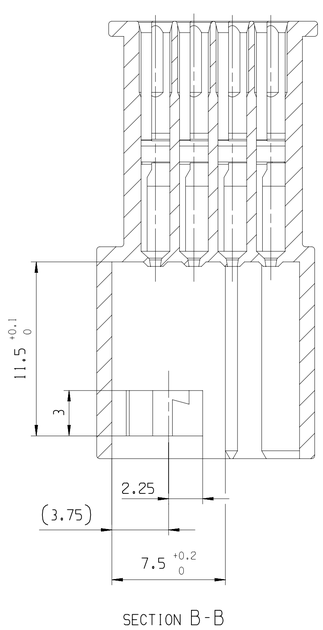

SECTION B-B

NOTE	SPECIFICATIONS
1	MALE CONNECTOR ACCORDING TO APTIV SPECIFICATION: CAQE TBD
2	MALE CONNECTOR ACCORDING TO: -TEMPERATURE CLASS TX -ENGINE VIBRATOR CLASS VX -SEALING CLASS EX
3	USER'S MANUAL: 13631404-CUS74-S01
4	DELIVERY CONNECTOR WEIGHT : SEE TABLE
5	NO WAFER HINGE OR WAFER HINGE BROKEN ALLOWED
6	VISUAL DEFECTS ON NO FUNCTIONNAL AREAS ALLOWED
7	MATERIAL NAME
8	TOOL CAVITY NUMBER
9	INDEX REPLCEMENT INSERT
10	PART CAVITY NUMBER
11	SUPPLIER LOGO
12	DATE INSERT

3D VIEW

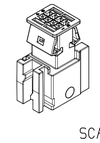

SCALE 1:1

SECONDARY LOCKING
IN END LOCKED POSITION

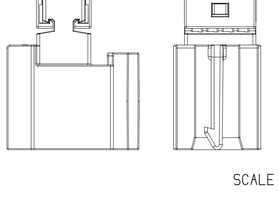

SCALE 2:1

ASSOCIATED PARTS (FOR INFORMATION)

DESCRIPTION	APTIV P/N	WIRE SECTION	DIAMETER OF WIRE SIZE
MATING PART	TBD	-	-
MQS 0.63 MALE TERMINAL	TBD	0.75mm²	1.9

TAB HOUSING 8 WAY	C	3 031 09 25	13545078	0.0037	PBT GF15	LIGHT BLUE
DESCRIPTION	CODE	MVL PART NUMBER	APTIV PART NUMBER	WEIGHT (kg)	MATERIAL	COLOR

A ——— LINE DRAWN THROUGH A PART NUMBER INDICATES THAT PHYSICAL PARTS ARE NOT AVAILABLE FOR ORDERING.

PART NUMBERS THAT DO NOT HAVE A LINE PRESENT INDICATE THAT PHYSICAL PARTS ARE AVAILABLE FOR ORDERING.

CONTACT APTIV SALES TO ASSURE AVAILABILITY OF PARTS.

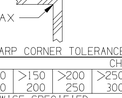

SHARP CORNER TOLERANCE

	DIMENSIONAL RANGE (MM)									CHART E1
DIM TO CHECK	FROM 0 TO 20	>20 30	>30 70	>70 100	>100 150	>150 200	>200 250	>250 300	>300 400	
( ) DIM FOR HELP	TOLERANCE UNLESS OTHERWISE SPECIFIED									
THEORETIC DIM	±0.15	±0.2	±0.3	±0.4	±0.5	±0.6	±0.8	±1	±1.2	
	ANGULAR TOLERANCE ±2°									

DWG TYP: CUSTOMER PART DRAWING

WEIGHT (GR): SEE TABLE
VOLUME (CM³): ---
ROUTING:
DISTR CODE: D

UNLESS OTHERWISE SPECIFIED

GENERAL TOLERANCES ACCORDING TO:

SEE CHART

GD&T ACCORDING TO:

ISO 1101

REFERENCE

FIRST ANGLE PROJECTION

DO NOT SCALE
USE MATH DATA
CAD NX

•APTIV•

CONNECTION SYSTEMS
Chennai, India
COPYRIGHT 2021 APTIV. ALL RIGHTS RESERVED.

THIS DRAWING IS THE PROPERTY OF APTIV AND CONTAINS APTIV CONFIDENTIAL INFORMATION. THE REPRODUCTION, DISTRIBUTION AND UTILIZATION OF THIS DOCUMENT OR ITS RELATED CAD MATH DATA, AS WELL AS COMMUNICATION OF ANY CONTENT TO OTHERS, WITHOUT EXPRESS AUTHORIZATION, IS PROHIBITED.

	DATE
DR P.BALAJI	21MR22
APVD1 LAGUETTE MAURICE	21MR22
APVD2 LAGUETTE MAURICE	21MR22
APVD3	
APVD4	
APVD5	

SUBSTANCES OF CONCERN AND RECYCLED CONTENT PER APTIV 1094001

MATERIAL: SEE TABLE

DRAWING NAME: TAB HOUSING 8 WAY FOR MQS 0.63

DRAWING NUMBER: 13631404

SIZE	SCALE	FRAME NO	SHEET NO	STG	REV	N/P
A1	5:1	1 OF 1	1 OF 1	R	01	

User: KZ6TM
Path: 13631404-CUS03-S01/01 Date: 28-Mar-22 Time: 13:06:39
Z:\Z6TM\13631404-CUS03-S01\01_20220222_095135_1166pass.cub