TAB HOUSING 4 WAY OPTION 2 WITH LOCKING PART	
APTIV P/N	CODING
13543934	CODING - A

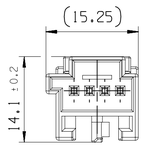

13543935	CODING - B

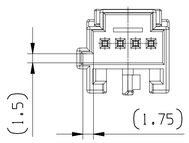

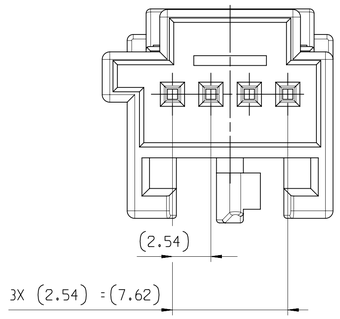

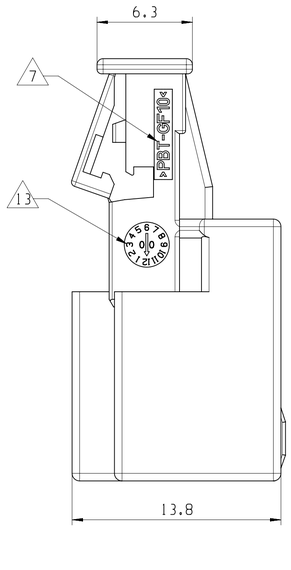

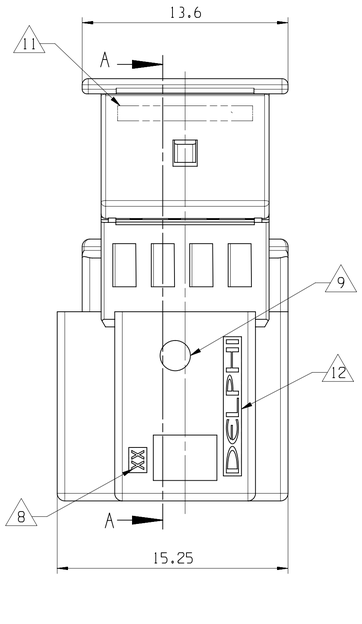

SECTION A-A

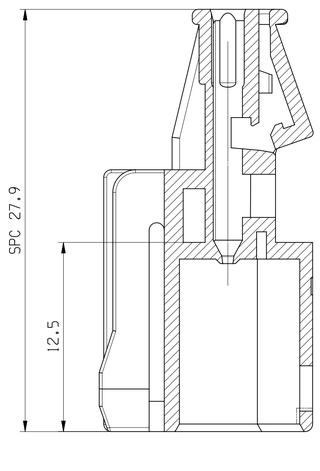

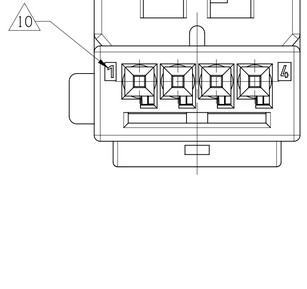

NOTE	SPECIFICATIONS
1	MALE CONNECTOR ACCORDING TO APTIV SPECIFICATION: CAQE TBD
2	MALE CONNECTOR ACCORDING TO: -TEMPERATURE CLASS TX -ENGINE VIBRATOR CLASS VX -SEALING CLASS EX
3	USER'S MANUAL: 13543936-CUS74-S01
4	DELIVERY CONNECTOR WEIGHT : SEE TABLE
5	NO WAFER HINGE OR WAFER HINGE BROKEN ALLOWED
6	VISUAL DEFECTS ON NO FUNCTIONNAL AREAS ALLOWED
7	MATERIAL NAME
8	TOOL CAVITY NUMBER
9	INDEX REPLCEMENT INSERT
10	PART CAVITY NUMBER
11	SUPPLIER LOGO
12	REPLACEMRNT INSERT BLANK
13	DATE INSERT

OVERALL DIMENSION FOR MOUNTABILITY

SECONDARY LOCKING
IN END LOCKED POSITION

SCALE 2:1

WITH MATING PART

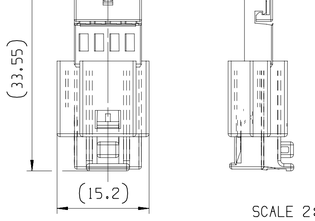

SCALE 2:1

ASSOCIATED PARTS (FOR INFORMATION)

DESCRIPTION	APTIV P/N	WIRE SECTION	DIAMETER OF WIRE SIZE
MATING PART	13543933	-	-
MQS 0.63 MALE TERMINAL	13580602	0.75mm²	1.9

DESCRIPTION	CODE	VARIENT	APTIV PART NUMBER	WEIGHT (kg)	MATERIAL	COLOR
TAB HOUSING 4 WAY	B	2	13543935	0.0022	PBT GF10	NATURE
	A		13569717	0.0022	PBT GF10	YELLOW
			13543934	0.0022	PBT GF10	BLACK

A LINE DRAWN THROUGH A PART NUMBER INDICATES THAT PHYSICAL PARTS ARE NOT AVAILABLE FOR ORDERING.

PART NUMBERS THAT DO NOT HAVE A LINE PRESENT INDICATE THAT PHYSICAL PARTS ARE AVAILABLE FOR ORDERING.

CONTACT APTIV SALES TO ASSURE AVAILABILITY OF PARTS.

SHARP CORNER TOLERANCE

	DIMENSIONAL RANGE (MM)								CHART E1
DIM TO CHECK	FROM TO	> 0 20	> 20 30	> 30 70	> 70 100	>100 150	>150 200	>200 250	>250 300	>300 400
( ) DIM FOR HELP	TOLERANCE UNLESS OTHERWISE SPECIFIED									
THEORETIC DIM		±0.15	±0.2	±0.3	±0.4	±0.5	±0.6	±0.8	±1	±1.2
	ANGULAR TOLERANCE ±2°									

DWG STATUS					ZONE	REVISION HISTORY	AUTH	DR	APVD 1	APVD 2
DATE	STG	REV	N/P	CHG						
22N021	R	01				INITIAL RELEASE		P.BAL	M.LAG	M.LAG

3D VIEW

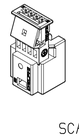

SCALE 1:1

DWG TYP
CUSTOMER PART DRAWING

WEIGHT (GR)
SEE CHART

VOLUME (CM³)

ROUTING

DISTR CODE
D

UNLESS OTHERWISE SPECIFIED

GENERAL TOLERANCES ACCORDING TO:

SEE CHART

GD&T ACCORDING TO:

ISO 1101

REFERENCE

FIRST ANGLE PROJECTION

DO NOT SCALE

USE MATH DATA

CAD NX

•APTIV•

CONNECTION SYSTEMS

Chennai, India

COPYRIGHT 2021 APTIV. ALL RIGHTS RESERVED.

THIS DRAWING IS THE PROPERTY OF APTIV AND CONTAINS APTIV CONFIDENTIAL INFORMATION. THE REPRODUCTION, DISTRIBUTION AND UTILIZATION OF THIS DOCUMENT OR ITS RELATED CAD MATH DATA, AS WELL AS COMMUNICATION OF ANY CONTENT TO OTHERS, WITHOUT EXPRESS AUTHORIZATION, IS PROHIBITED.

		DATE
DR	P.BALAJI	22N021
APVD1	LAGUETTE MAURICE	22N021
APVD2	LAGUETTE MAURICE	22N021
APVD3		
APVD4		
APVD5		

SUBSTANCES OF CONCERN AND RECYCLED CONTENT PER APTIV 10949001

MATERIAL
SEE CHART

DRAWING NAME
TAB HOUSING 4 WAY
FOR MQS 0.63

DRAWING NUMBER
13543936

SIZE	SCALE	FRAME NO	SHEET NO	STG	REV	N/P
A1	5:1	1 OF 1	1 OF 1	R	01	

CONTROLLED DOCUMENTS ARE ONLY AVAILABLE ON THE SERVER

User: KZ5GTM, Date: 25-Feb-22 Time: 10:03:17
Form: LOGO-CUS03-S01/01 Date: 25-Feb-22
KZ5GTM,02225022,05:32,1148pass.cus