MECHANICAL CODING

VARIANT 2

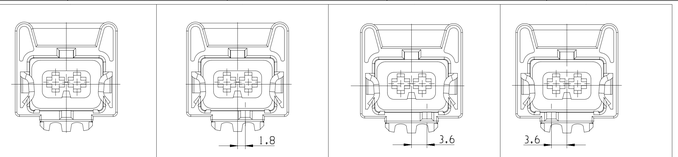

PART NO.	33402662	PART NO.	33402663	PART NO.	33402664	PART NO.	33402665
COLOR	GREY	COLOR	GREEN	COLOR	BROWN	COLOR	WHITE

DETAIL Z
SCALE 5:1

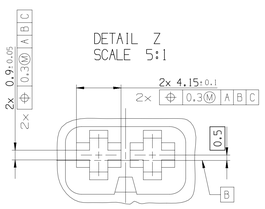

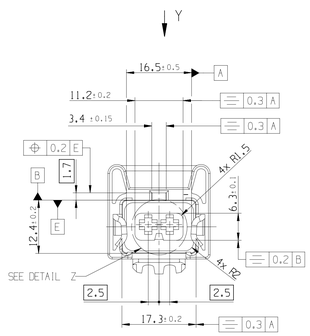

SECTION A-A

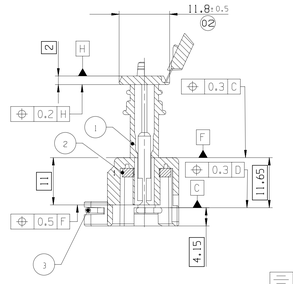

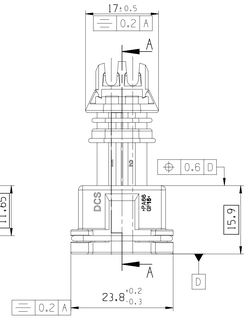

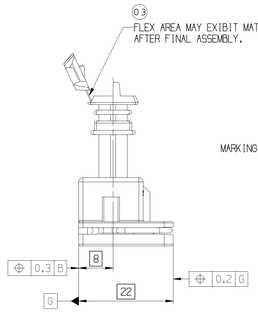

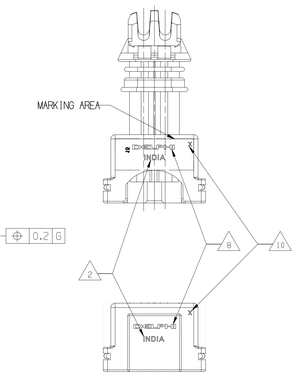

VARIANT 2

VIEW CAP CLOSED
SECTION A-A

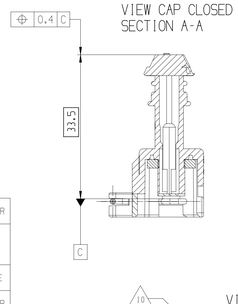

VIEW Y
SCALE 5:1

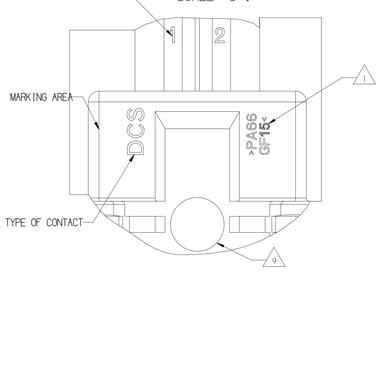

02

TYCO 2.8mm FEMALE TERMINAL	-		929939-1/ 929940-1	0.5 - 1.0	SEE TYCO DRAWING	-	-	828904-1	0.35 - 1.0	SILICON / BLUE
DCS-2 2.8mm FEMALE TERMINAL	6 001 29 41	10779097	-	2.5	CONTACT BODY CuSn4 R540 LOCKING SPRING X12CrNi188	211 M 0010	10757056	-	2.65 - 3.0	SILICON / BLUE
				1.5 - 2.0		240 M 040	13578695	-	2.1 - 2.8	SILICON /BROWN
	6 001 29 31	10789065	-	0.5 - 1.0		211 M 0009	-	-	1.45 - 2.15	SILICON / RED
	6 001 29 11	10811334	-	0.35		6 099 40 15	10779162	-	1.2 - 2.0	SILICON / BLUE
DESCRIPTION	MVL PART-NO.	DELPHI PART NO.	CUSTOMER PART-NO.	WIRE CROSS SECTION (mm²)	MATERIAL / SURFACE	MVL PART-NO.	DELPHI PART NO.	CUSTOMER PART-NO.	FOR INSULATION Ø (mm)	MATERIAL / COLOR
SUITABLE TERMINALS						SUITABLE SINGLE WIRE SEAL				

MVL LEGACY NO.	REV. INDEX	DELPHI PART NO.	REV. INDEX	ASSEMBLY NAME	CUSTOMER PART-NO.	CODING	WEIGHT (g)	ITEM	QUANTITY	COMPONENT NAME	MVL LEGACY COMPONENT NO.	COMPONENT REV. INDEX	DELPHI COMPONENT NO.	COMPONENT REV. INDEX	MATERIAL	COLOUR
-	-	33402665	01	2W DCS FEMALE CONNECTOR	XXXXXXX	IV	5.5	3	1	SPRING	B 022 02 60-B	A	33501137	01	STAINLESS STEEL AISI 302 Ø 1.25	SILVER
								2	1	INTERFACE SEAL	B 040 00 60	J	33503301	01	LSR 2040 (Alternative name: VQMI SAE J 200 M5 GE 406 A19, B37, E016, G11	RED
								1	1	2W FEMALE HOUSING	-	-	33402660	02 03	PA 6.6 GF 15% 03	WHITE
-	-	33402664	01		XXXXXXX	III	5.5	3	1	SPRING	B 022 02 60-B	A	33501137	01	STAINLESS STEEL AISI 302 Ø 1.25	SILVER
								2	1	INTERFACE SEAL	B 040 00 60	J	33503301	01	LSR 2040 (Alternative name: VQMI SAE J 200 M5 GE 406 A19, B37, E016, G11	RED
								1	1	2W FEMALE HOUSING	-	-	33402659	02 03	PA 6.6 GF 15% 03	BROWN
-	-	33402663	01		XXXXXXX	II	5.5	3	1	SPRING	B 022 02 60-B	A	33501137	01	STAINLESS STEEL AISI 302 Ø 1.25	SILVER
								2	1	INTERFACE SEAL	B 040 00 60	J	33503301	01	LSR 2040 (Alternative name: VQMI SAE J 200 M5 GE 406 A19, B37, E016, G11	RED
								1	1	2W FEMALE HOUSING	-	-	33402658	02 03	PA 6.6 GF 15% 03	GREEN
-	-	33402662	01		XXXXXXX	I	5.5	3	1	SPRING	B 022 02 60-B	A	33501137	01	STAINLESS STEEL AISI 302 Ø 1.25	SILVER
								2	1	INTERFACE SEAL	B 040 00 60	J	33503301	01	LSR 2040 (Alternative name: VQMI SAE J 200 M5 GE 406 A19, B37, E016, G11	RED
								1	1	2W FEMALE HOUSING	-	-	33402657	02 03	PA 6.6 GF 15% 03	GREY
F261210	A	33503563	01		2434026928	-	5.0	3	1	SPRING	B 022 02 60-B	A	33501137	01	STAINLESS STEEL AISI 302 Ø 1.25	SILVER
								2	1	INTERFACE SEAL	B 040 00 60	J	33503301	01	LSR 2040 (Alternative name: VQMI SAE J 200 M5 GE 406 A19, B37, E016, G11	RED
								1	1	2W FEMALE HOUSING	5161210	A	33510314	02 03	PA 6.6 GF 15% 03	BROWN
F786010	A	33503560	01		XXXXXXX	-	5.0	3	1	SPRING	B 022 02 60-B	A	33501137	01	STAINLESS STEEL AISI 302 Ø 1.25	SILVER
								2	1	INTERFACE SEAL	B 040 00 60	J	33503301	01	LSR 2040 (Alternative name: VQMI SAE J 200 M5 GE 406 A19, B37, E016, G11	RED
								1	1	2W FEMALE HOUSING	5586010	A	33510313	02 03	PA 6.6 GF 15% 03	BLUE
F686010	A	33503562 03	01		XXXXXXX	-	5.0	3	1	SPRING	B 022 02 60-B	A	33501137	01	STAINLESS STEEL AISI 302 Ø 1.25	SILVER
								2	1	INTERFACE SEAL	B 040 00 60	J	33503301	01	LSR 2040 (Alternative name: VQMI SAE J 200 M5 GE 406 A19, B37, E016, G11	RED
								1	1	2W FEMALE HOUSING	5486010	A	33510312	02 03	PA 6.6 GF 15% 03	NATURAL
F454800	B	33503561	01		2434017888	-	5.0	3	1	SPRING	B 022 02 60-B	A	33501137	01	STAINLESS STEEL AISI 302 Ø 1.25	SILVER
								2	1	INTERFACE SEAL	B 040 00 60	J	33503301	01	LSR 2040 (Alternative name: VQMI SAE J 200 M5 GE 406 A19, B37, E016, G11	RED
								1	1	2W FEMALE HOUSING	5763800	C	33510311	02 03	PA 6.6 GF 15% 03	BLACK

	NOTES
1	MATERIAL MARKING
2	MANUFACTURING COUNTRY
3	CUSTOMER PART NUMBER ACCORDING TO TABLE
4	DELPHI COMPANY LOGOTYPE, HEIGHT 3, RAISED 0.1
5	DELPHI ASSEMBLY PART-NO. - SEE TABLE
6	DELPHI COMPONENT NUMBER - SEE TABLE
7	DELPHI COMPONENT REVISION INDEX
8	MOLD CAVITY IDENTIFICATION
9	DATE CLOCK Ø 5mm; MAX. 0.5MM RAISED; MAX. 0.5MM SUNKED
10	CAVITY-IDENTIFICATION
11	MATING FORCE :70N MAX
12	TERMINAL INSERTION FORCE : 20N MAX WITH 2.5mm²
13	TEMPERATURE CLASS : 3 (-40° C / +125° C)
14	SEALING CLASS: 2 (IMMERSION +0.5 Bar-1
15	VIBRATION CLASS : 2
16	MASS OF THE PRODUCT : 0.005 kg ± 10%

DWG STATUS DATE	STG	REV	N/P	CHG	ZONE	REVISION HISTORY	AUTH	DR	APVD 1	APVD 2
12MY14	R	01	-	-		FILE TRANSLATED FROM MVL SYSTEM		DGL	DGL	DGL
15DE14	R	02	-	-		DELPHI P/N ADDED IN TERMINAL INFORMATION TABLE SEAL REMOVED FROM DIMENSIONAL A= 8.5 SEE REV. "01" FOR PREVIOUS CHANGES		R.VEN	R.PRA	S.ANU
02N021	R	03	-	-	All Rights Reserved	MATERIAL CHANGE FROM "PA 66 GF15" TO "PA66 GF15" RPN CHANGED FROM 33503562 TO 33503562 NOTES ADDED IN THE VIEW		R.VEN	R.PRA	S.ANU

3D VIEW SCALE 1:1

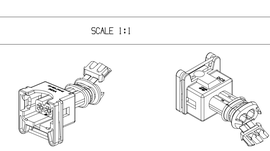

DWG TYP: CUSTOMER PART DRAWING
WEIGHT (GR): SEE TABLE
VOLUME (CM³): -
ROUTING: -
DISTR CODE: D
UNLESS OTHERWISE SPECIFIED

GENERAL TOLERANCES ACCORDING TO: ±0.3 ±2°

GD&T ACCORDING TO:

A ——— LINE DRAWN THROUGH A PART NUMBER INDICATES THAT PHYSICAL PARTS ARE NOT AVAILABLE FOR ORDERING.

PART NUMBERS THAT DO NOT HAVE A LINE PRESENT INDICATE THAT PHYSICAL PARTS ARE AVAILABLE FOR ORDERING.

CONTACT APTIV SALES TO ASSURE AVAILABILITY OF PARTS.

MIT EINER ——— LINIE DURCHGESTRICHENE PART-NR. GEKENNZEICHNET DASS DIESE PART-NR NICHT BESTELLT WERDEN KANN.

PART-NR. DIE KEINE LINIE ZEIGEN, KENNZEICHNEN, DAS TEILE ZUR BESTELLUNG VERFUEGBAR SIND

FUER VERFUEGBARKEIT DER PARTS DEN EINKAUF VON APTIV KONTAKTIEREN.

R 0.1 MAX
R 0.2 MAX
SHARP CORNER TOLERANCE

DIM TO CHECK PRUEFMASSE
( ) DIM FOR HELP HILFSMASSE
THEORETIC DIM THEORE. MASSE

DO NOT SCALE
USE MATH DATA

REFERENCE: pcc070617

THIRD ANGLE PROJECTION

•APTIV•
DELPHI PACKARD ELECTRICAL/ELECTRONIC ARCHITECTURE
Chennai, India

COPYRIGHT 2014 DELPHI CORPORATION AND/OR ITS AFFILIATES.
ALL RIGHTS RESERVED.
REVISED 2014
THIS DRAWING IS THE PROPERTY OF DELPHI CORPORATION AND CONTAINS DELPHI CONFIDENTIAL INFORMATION. THE REPRODUCTION, DISTRIBUTION AND UTILIZATION OF THIS DOCUMENT OR ITS RELATED CAD MATH DATA, AS WELL AS COMMUNICATION OF ANY CONTENT TO OTHERS, WITHOUT EXPRESS AUTHORIZATION, IS PROHIBITED.

DIESE ZEICHNUNG IST EIGENTUM DER FIRMA DELPHI UND ENTHÄLT DELPHI VERTRAULICHE INFORMATIONEN. DIE REPRODUKTION, VERTEILUNG UND NUTZUNG DIESES DOKUMENTES ODER DEREN ZUGEHÖRIGEN CAD DATEN, ODER AUCH ALS KOMMUNIKATION VON BELIEBIGEN INHALT ZU ANDEREN IST OHNE BERECHTIGUNGSPRUEFUNG DURCH DIE DELPHI CORPORATION UNZULAESSIG.

		DATE
DR	P RAMAKRISHNAN	29JA14
APVD1	SEBASTIAN ANUP	11FE14
APVD2	K NAGASHAYANA	11FE14
APVD3		
APVD4		
APVD5		

SUBSTANCES OF CONCERN AND RECYCLED CONTENT PER APTIV 10949001
POTENTIELL GEFAEHRLICHE STOFFE UND RECYCLATANTEIL GEMAESS DELPHI 10949001

MATERIAL: SEE TABLE

DRAWING NAME: 2W DCS FEMALE CONNECTOR

DRAWING NUMBER: 33517452

SIZE	SCALE	FRAME NO	SHEET NO	STG	REV	N/P
A0	2:1	1 OF 1	1 OF 1	R	03	-

User: KAMPU
Name: 33517452_C1B1S1_02N021.asm
File: 33517452_C1B1S1_02N021.asm, Date: 12-Oct-22 Time: 12:29:53