SYMBOL DEFINITION		
A DIMENSION WITHOUT AN INSPECTION REPORT SYMBOL ( ) DOES NOT REQUIRE INSPECTION. IT MAY BE CONTROLLED ON THE INDIVIDUAL COMPONENT DRAWING.	TOTAL NO OF INSPECTIONS REQUIRED	66
	LAST NO. USED	48

MISSING SYMBOLS: NO MISSING SYMBOL NUMBER

DWG STATUS										
DATE	STG	REV	N/P	CHG	ZONE	REVISION HISTORY	AUTH	DR	APVD1	APVD2
29JN23	R	01	-	-		INITIAL RELEASE	449394	FCF	LXT	FCF

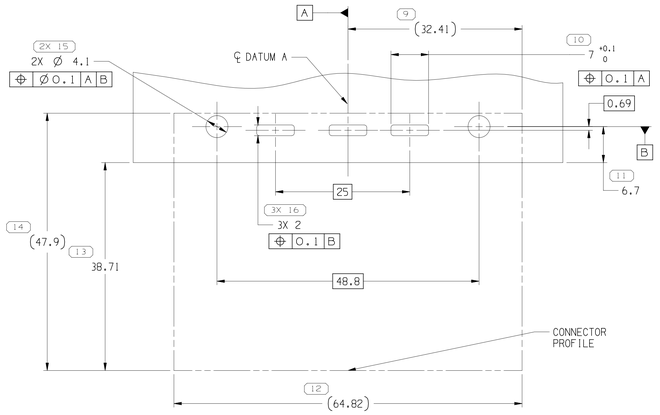

RECOMMENDED PRINT CIRCUIT BOARD LAYOUT
PCB THICKNESS 1.6mm, TOLEARANCE±0.05
COMPONENT SIDE

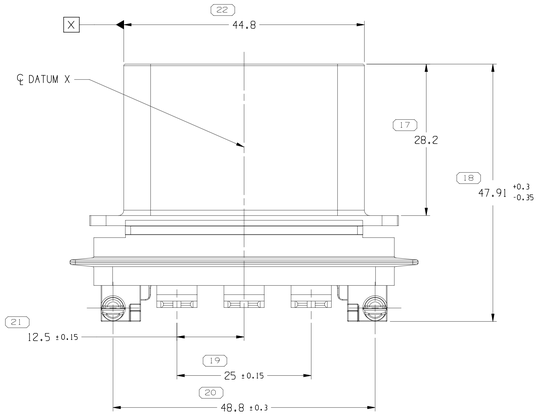

BOTTOM VIEW

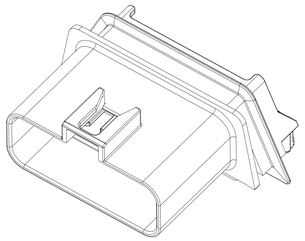

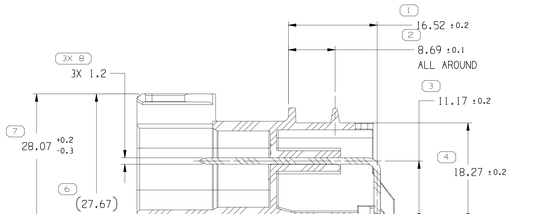

SECTION A-A

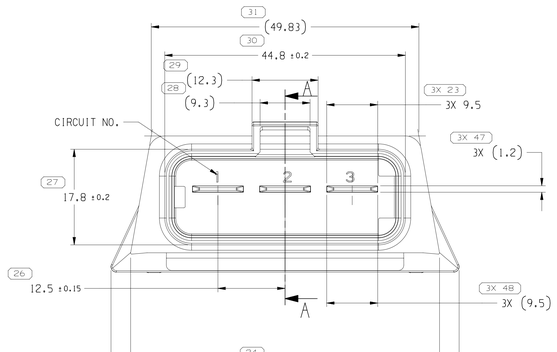

FRONT VIEW

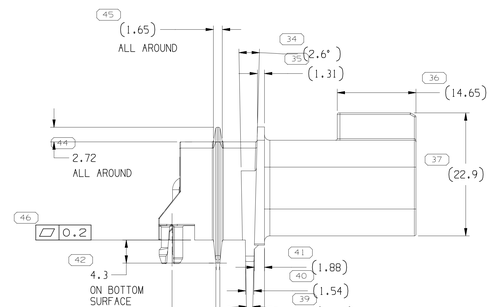

LEFT VIEW

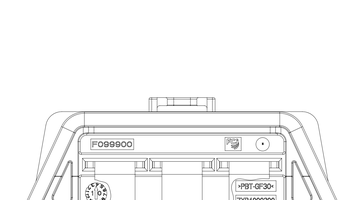

REAR VIEW

NOTES

1. MATERIAL:
   HOUSING RESIN: PBT GF30, HB OR EQUIVALENT
   FLAMMABILITY, LIGHT GRAY(RAL7047)
   TERMINAL: COPPER ALLOY. MEET RoHS REQUIREMENT
2. PLATING: TIN OVER NICKEL
3. MISSING DIMENSIONS/UNDIMENSIONED DETAILS ACCORDING TO 3D-CAD-DATA.
4. MATING WITH APTIV FEMALE:33509924

3W PIN HEADER W/T 9.5 TERMINAL	33509982
DESCRIPTION	APTIV ASSEMBLY PART NUMBER

A ——— LINE DRAWN THROUGH A PART NUMBER INDICATES THAT PHYSICAL PARTS ARE NOT AVAILABLE FOR ORDERING.

PART NUMBERS THAT DO NOT HAVE A LINE PRESENT INDICATE THAT PHYSICAL PARTS ARE AVAILABLE FOR ORDERING.

CONTACT APTIV SALES TO ASSURE AVAILABILITY OF PARTS.

DWG TYPE: PART DRAWING

STYLE

VOLUME (CM³)

DISTR CODE

UNLESS OTHERWISE SPECIFIED
THIS DOCUMENT IS IN ACCORDANCE WITH ASME Y14.5M-1994 AS AMENDED BY THE GM GLOBAL DIMENSIONING AND TOLERANCING ADDENDUM-2001. SEPARATE PATTERNS OF FEATURES MAY BE GAGED SEPARATELY REGARDLESS OF DATUM REFERENCES.

ALL DIMENSIONS ARE IN MILLIMETERS

REFERENCE

(N/A) PROCESS SENSITIVE DIMENSION

DIMENSIONS ENCLOSED IN ( ) INDICATE REFERENCE DIMENSIONS AND NO TOLERANCE LIMITS ARE ESTABLISHED

DIMENSIONAL RANGE (MM)					CHART E
FROM	0	>20	>30	>70	>100
TO	20	30	70	100	
TOLERANCE UNLESS OTHERWISE SPECIFIED					
	±0.15	±0.2	±0.3	±0.4	±0.5
ANGULAR TOLERANCE ±2°					

THIRD ANGLE PROJECTION

DO NOT SCALE
USE MATH DATA

NX

•APTIV•
CONNECTION SYSTEMS
Anting, China

COPYRIGHT 2023 APTIV. ALL RIGHTS RESERVED.

THIS DRAWING IS THE PROPERTY OF APTIV AND CONTAINS APTIV CONFIDENTIAL INFORMATION. THE REPRODUCTION, DISTRIBUTION AND UTILIZATION OF THIS DOCUMENT OR ITS RELATED CAD MATH DATA, AS WELL AS COMMUNICATION OF ANY CONTENT TO OTHERS, WITHOUT EXPRESS AUTHORIZATION, IS PROHIBITED.

		DATE
DR		
APVD1	CHAOFEI FANG	30JN23
APVD2	XINTIAN LI	30JN23
APVD3	CHAOFEI FANG	30JN23
APVD4		
APVD5		

SUBSTANCES OF CONCERN AND RECYCLED CONT[0949001] [0949001]

MATERIAL: SEE NOTES 1

DRAWING NAME: ASM CONN 3 M 9.5 HEADER

DRAWING NUMBER: 33509982

SIZE	SCALE	FRAME NO	SHEET NO	STG	REV	N/P
A0		1 OF 1	1 OF 1	R	01	-

Time: 14:29:28
Date: 29-Jul-23
Dwg#: 33509982_01_01
Part: 33509982_01_01
Dwg: 33509982_01_01.dwg