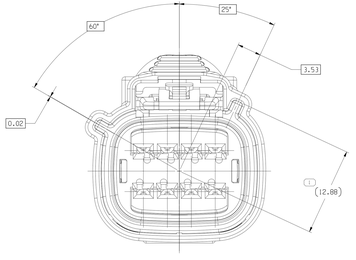


TYPE 102
SAME AS TYPE 101
EXCEPT AS SHOWN

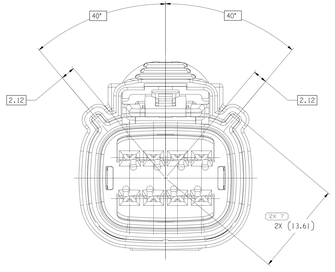


TYPE 105
SAME AS TYPE 101
EXCEPT AS SHOWN

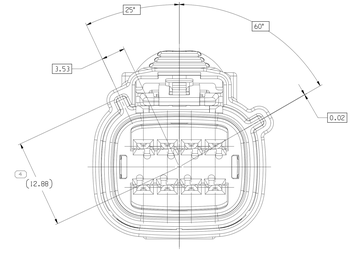


TYPE 103
SAME AS TYPE 101
EXCEPT AS SHOWN

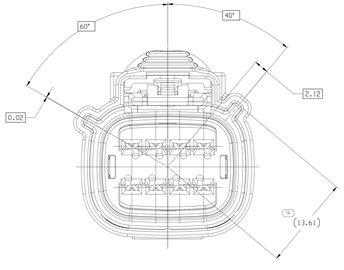


TYPE 106
SAME AS TYPE 101
EXCEPT AS SHOWN

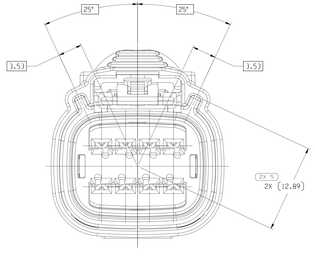


TYPE 104
SAME AS TYPE 101
EXCEPT AS SHOWN

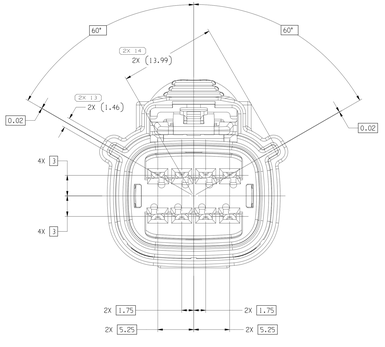


TYPE 101

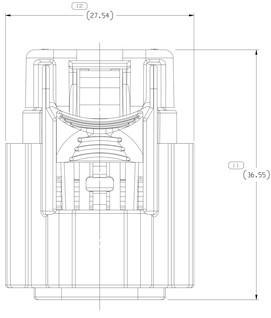


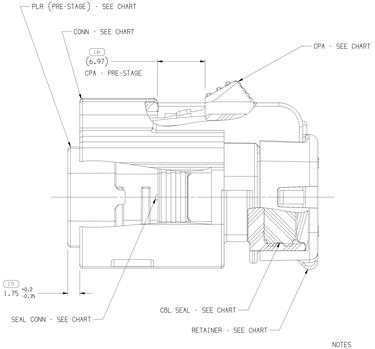


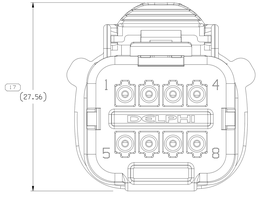


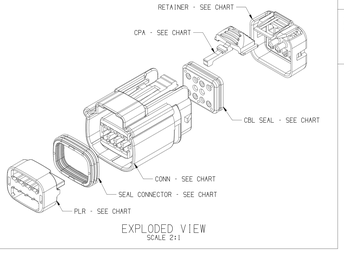


EXPLODED VIEW
SCALE 2:1

| SYMBOL DEFINITION | | MISSING SYMBOLS |
|---|---|---|
| A DIMENSION WITHOUT AN INSPECTION REPORT SYMBOL DOES NOT REQUIRE INSPECTION. IT MAY BE CONTROLLED ON THE INDIVIDUAL COMPONENT DRAWING. | TOTAL NO OF INSPECTIONS REQUIRED: 16 | 2 3 6 8 10 |
| | LAST NO. USED: 17 | |

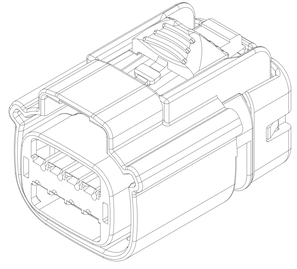

| DWG STATUS | | | | | ZONE | REVISION HISTORY | AUTH | DR | APVD | APVD |
|---|---|---|---|---|---|---|---|---|---|---|
| DATE | ISSUE | REV | N/P | CHG | | | | | | |
| 10JA13 | R | 01 | - | - | - | 15514667 -WAS PE246387, REV'D & RELEASED;<br>15514668 -WAS PE246388, REV'D & RELEASED;<br>15514669 -WAS PE246389, REV'D & RELEASED;<br>15514670 -WAS PE246390, REV'D & RELEASED;<br>15514671 -WAS PE246391, REV'D & RELEASED;<br>15514672 -WAS PE246392, REV'D & RELEASED; | 421059 | HCD | HCD | DGI | |
| 21MF13 | R | 02 | - | - | - | ALL PARTS - UPDATED PDM ATTRIBUTES | 421644 | AHY | AHY | DAT |
| 21MF13 | R | 03 | - | - | - | ALL PARTS - UPDATED CONN, RETAINER AND PLR | 422336 | AHY | AHY | DAT |
| 01NO13 | R | 04 | - | - | - | ALL PARTS - UPDATED PLR, SEAL CONN, SEAL CBL AND CPA | 424351 | DCH | DCH | DGI |
| 05DE13 | R | 05 | - | - | - | ALL PARTS - ADDED "ACCEPTED CABLE O.D." NOTE | 424878 | CDD | CDD | DGI |
| 13OC14 | R | 06 | - | - | - | ALL PARTS - UPDATED CONN, CPA, RETAINER, PLR AND RELATED DIMS | 427903 | ADC | JVW | DGI |
| 21SE15 | R | 07 | - | - | - | ALL PARTS - 6.97 +0.15/-0.25 WAS 6.97, 1.75 +1.15/-0.25 WAS 1.75 AND UPDATED PART AVAILABILITY | 430845 | CDD | CDD | DAT |
| 02OC15 | R | 08 | - | - | - | ALL PARTS - 1.75 +0.15/-0.4 WAS 1.75 +0.15/-0.25 | 430983 | JOM | JOM | FBK |
| 25FE16 | R | 09 | - | - | - | 15514668-72 - UPDATED PART AVAILABILITY | 432154 | ADC | JVW | DGL |
| 06JL17 | R | 10 | - | - | - | ALL PARTS - ADDED "ASSEMBLY" NOTES 13 PLS1, REMOVED "ASSEMBLY ACCEPTS CABLE O.D" NOTE AND UPDATED "APPEARANCE" NOTE | 437090 | JOM | JOM | DGL |
| 10JA18 | R | 11 | - | - | - | ALL PARTS - ADDED SHT 1 OF 2 | 438404 | ESC | ESC | ACV |
| 19JN18 | R | 12 | - | - | - | 15514667 - UPDATED PDM ATTRIBUTES;<br>ALL PARTS - (6.97) WAS 6.97 +0.15/-0.25; (1.75 +0.2/-0.25 WAS 1.75 +0.15/-0.4; PSD WAS DIM #15 | 440179 | ACV | DGL | ACV |
| 18JL18 | R | 13 | - | - | - | 15514668 - UPDATED PART AVAILABILITY | 440459 | ACV | DGL | ACV |
| 19JN19 | R | 14 | - | - | - | ALL PARTS - ADDED "PUNCH PATTERN CONFIGURATIONS" & "ASSEMBLIES WITHOUT CPA" NOTES | 443333 | LLL | DSP | DSP |

NOTES

1. UNLESS OTHERWISE SPECIFIED AND/OR INDICATED:

   DIMENSIONS ARE TO FACE OF VIEW SHOWN AND AUTOMATICALLY ROUNDED BY COMPUTER FOR INSPECTION (SEE MATH MODEL FOR PRECISE DIMENSIONS). FOR ALL OTHER DIMENSIONS NOT SHOWN BUT REQUIRED FOR TOOL BUILD, SEE MATH MODEL FOR PRECISE TOOL PATH DATA.

2. PART IS MANUFACTURED TO GEOMETRIC TOLERANCES. CENTERLINE DIMENSIONS ARE FOR REFERENCE ONLY.

3. SEALING CODE 4 - DESIGN WILL MEET REQUIREMENTS OF SAE/USCAR-2 CONNECTOR SYSTEM ENVIRONMENTAL TEST FLOWCHART (PRESSURE/VACUUM AND SUBMERSION).

4. THIS PRODUCT IS NOT CATEGORIZED AS AN APPEARANCE ITEM. MINOR IMPERFECTIONS INCLUDING, BUT NOT LIMITED TO, FLOW MARKS, COLOR BLEMISHES, GATE VESTIGE, AND SOFT FLASH THAT DO NOT AFFECT THE FIT, FORM, OR FUNCTION OF THE PART ARE PERMISSIBLE PER ENAP.4-3.CS.01.EN.

5. FOR APPLICATION DATA SEE THE INDIVIDUAL APPLICATION DRAWINGS.

6. ASSEMBLY TO BE USED WITH APPROPRIATE APTIV HOLDER DESIGN.

7. ASSEMBLY TO BE PROCESSED USING APTIV CONNECTION SYSTEMS BEST PRACTICE METHODS AND/OR CONNECTOR ASSEMBLY INSTRUCTIONS AND APPLICABLE REPAIR PROCEDURES.

8. BEFORE TERMINAL ASSEMBLY: VERIFY THAT PLR IS IN THE PRE-STAGE POSITION ON THE CONNECTOR. IF NOT: RETURN PLR TO PRE-STAGE POSITION.

9. FOR DIFFERENT PUNCH PATTERN CONFIGURATIONS (IF AVAILABLE) SEE SHEET 2

10. FOR ASSEMBLIES WITHOUT CPA SEE DRAWING 15532402

| PART NO | REV | N/P | TYPE | CONNECTOR | PLR | SEAL CONN | SEAL CBL | RETAINER | CPA | USCAR OPTION |
|---|---|---|---|---|---|---|---|---|---|---|
| 15514672 | 05 | AF | 106 | 15514665 | 15514685 | 15514684 | 15514683 | 15514678 | 15519096 | F |
| 15514671 | 05 | AF | 105 | 15514664 | 15514685 | 15514684 | 15514683 | 15514678 | 15519096 | E |
| 15514670 | 05 | AF | 104 | 15514663 | 15514685 | 15514684 | 15514683 | 15514678 | 15519096 | D |
| 15514669 | 05 | AF | 103 | 15514662 | 15514685 | 15514684 | 15514683 | 15514678 | 15519096 | C |
| 15514668 | 05 | AG | 102 | 15514661 | 15514685 | 15514684 | 15514683 | 15514678 | 15519096 | B |
| 15514667 | 06 | AA | 101 | 15514659 | 15514685 | 15514684 | 15514683 | 15514678 | 15519096 | A |

DRAWING NUMBER 15514673
A1x3 | SCALE 5:1 | IMAGE NO 2 OF 2 | SHEET NO 1 OF 2 R | REV 14 | N/P -

(N/A) PROCESS SENSITIVE DIMENSION

DIMENSIONS ENCLOSED IN ( ) INDICATE REFERENCE DIMENSIONS AND NO TOLERANCE IS GIVEN OR STANDARD.

| DIMENSIONAL RANGE (MM) | | | | | | | | |
|---|---|---|---|---|---|---|---|---|
| 0 TO | >6 TO 30 | >30 TO 120 | >120 TO 315 | >315 TO 1000 | >1000 TO 2000 | >2000 TO 4000 | >4000 TO 8000 | >8000 |
| TOLERANCE UNLESS OTHERWISE SPECIFIED | | | | | | | | |
| ±0.25 | ±0.4 | ±0.8 | ±1.2 | ±2.0 | ±3.2 | ±5.0 | ±8.0 | ±12.0 |
| ANGULAR TOLERANCE ±0° | | | | | | | | |

REFERENCE

THIRD ANGLE PROJECTION

DO NOT SCALE

USE MATH DATA

NX

LINE DRAWN THROUGH A PART NUMBER INDICATES THAT PHYSICAL PARTS ARE NOT AVAILABLE FOR ORDERING.

PART NUMBERS THAT DO NOT HAVE A LINE PRESENT INDICATE PHYSICAL PARTS WILL BE AVAILABLE FOR ORDERING.

CONTACT APTIV SALES TO ASSURE AVAILABILITY OF PARTS.

DWG TYPE: PART DRAWING

STYLE

VOLUME (CM³)

SYSTEM CODE

UNLESS OTHERWISE SPECIFIED

THIS DOCUMENT IS IN ACCORDANCE WITH ASME Y14.5M-1994 UNLESS OTHERWISE SPECIFIED. GENERAL GEOMETRIC TOLERANCES MAXIMUM OCCUR. SEPARATE PATTERNS OF FEATURES MAY BE GROUP SEPARATELY REGARDLESS OF DATUM REFERENCES.

ALL DIMENSIONS ARE IN MILLIMETERS


THIS DRAWING IS THE PROPERTY OF APTIV AND CONTAINS APTIV CONFIDENTIAL INFORMATION. THE INFORMATION CONTAINED HEREIN OR UTILIZATION OF THIS DOCUMENT OR ITS RELATED CAD MATH DATA, MUST NOT BE COMMUNICATED OR MADE AVAILABLE TO OTHERS, WITHOUT EXPRESS AUTHORIZATION, IS PROHIBITED.

COPYRIGHT 2013 APTIV. ALL RIGHTS RESERVED.


•APTIV•
CONNECTION SYSTEMS
WARREN, OH

| | | DATE |
|---|---|---|
| DR | HECTOR CLAUDIO | 10JA13 |
| APVD1 | HECTOR CLAUDIO | 17JA13 |
| APVD2 | GERARDO GOMEZ | 18JA13 |
| APVD3 | | |
| APVD4 | | |

SUBSTANCES OF CONCERN AND RECYCLED CONTENT PER APTIV (DRAFTED)

TITLE
SEE CHART

DRAWING NAME
TAX1 ASM CONN 8 F OCS 1.5 SLD

DRAWING NUMBER 15514673
A1x3 | SCALE 5:1 | IMAGE NO 1 OF 2 | SHEET NO 1 OF 2 R | REV 14 | N/P -

15514673

Tyler Hayes
Tuesday, 07/16/2019
Page 1 of 1
Drawing: 15514673 Rev: 14
Image: 1 of 2
Sheet: 1 of 2
Scale: 5:1
Date: 03-Jul-19
Time: 07:36:41