SYMBOL DEFINITION		
A DIMENSION WITHOUT AN INSPECTION REPORT SYMBOL ( ) DOES NOT REQUIRE INSPECTION. IT MAY BE CONTROLLED ON THE INDIVIDUAL COMPONENT DRAWING.	TOTAL NO OF INSPECTIONS REQUIRED	7
	LAST NO. USED	7

MISSING SYMBOLS
NO MISSING SYMBOL NUMBER

DWG STATUS					ZONE	REVISION HISTORY	AUTH	DR	APVD 1	APVD 2
DATE	STG	REV	N/P	CHG						
25AU20	R	01	-	-		INITIAL RELEASE	445838	BZY	ZK	HSB

PRELIMINARY
DRAWING
DO NOT USE FOR TOOLING
FOR DISTRIBUTION
ECO 445838

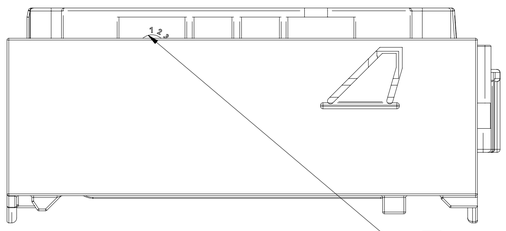

(1) DATE INSERT SIMILAR FIRM HASCO Z 485/6/1; HAVE TO BE THE MANUFACTURING DATE

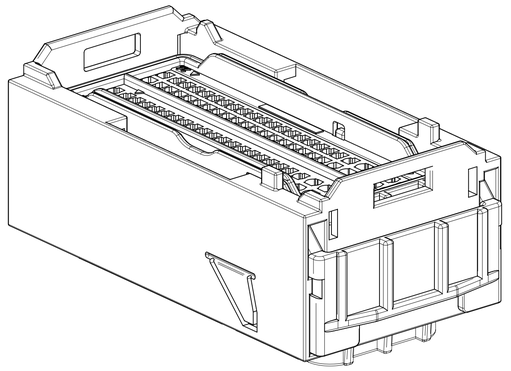

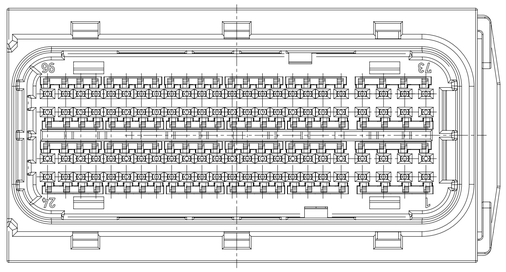

(2) MATERIAL NAME ACCORDING TO VDA 260 / FORMAT ACCORDING TO DIN 1451; H=1.6 MM

(3) 77.7

(7) (35.5)

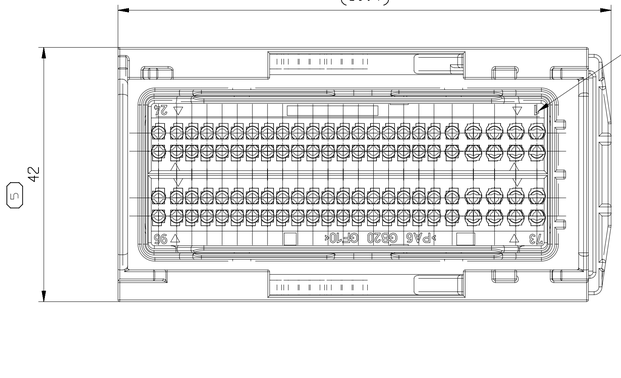

(4) PART CAVITY NUMBER / FORMAT ACCORDING TO DIN 1451; H=1.6 MM; LETTERS 0.2 MM RECESSED

(5) 42

(6) (81.4)

REMARKS:

- IN CASE OF PART MODIFICATION CHECK ASSEMBLY TOOLS AND TEST EQUIPMENT AT THE CUSTOMER AND THE SUPPLIER
- MARK PLASTIC PARTS PER VDA 260
- COMPATIBLY COVER AND LEVER SEE DRAWING NO.: 15494615
- BLANKED CAVITIES INDICATE CLOSED LOCATION
- CAVITIES 1-4; 25-28; 49-52; 73-76 FOR TERMINALS WITH OUTER DIAMETER 1.4-2.4 MM (TYCO 1394897-3; 1452503-3 OR EQUIVALENT) CRIMPDIMENSIONS SEE ESD 20704-CUS01-S02
- CAVITIES 5; 24; 29; 48; 53; 72; 77; 96 FOR TERMINALS WITH WITH OUTER DIAMETER 1.4-2.1 MM (TYCO 1394897-3; 1452503-3 OR EQUIVALENT) CRIMPDIMENSIONS SEE ESD 20703-CUS01-S02
- CAVITIES 6-23; 30-47; 54-71; 78-95 FOR TERMINALS WITH WITH OUTER DIAMETER 1.4-1.9 MM (TYCO 1394897-3 OR EQUIVALENT) CRIMPDIMENSIONS SEE ESD 20702-CUS01-S02
- ALL CAVITIES INDICATE OPEN LOCATIONS FOR TERMINALS SYSTEM 1.2

(5) PROCESS SENSITIVE DIMENSION

DIMENSIONS ENCLOSED IN ( ) INDICATE REFERENCE DIMENSIONS AND NO TOLERANCE LIMITS ARE ESTABLISHED

DIMENSIONAL RANGE (MM)									CHART E1
FROM TO	> 0 20	> 20 30	> 30 70	> 70 100	>100 150	>150 200	>200 250	>250 300	>300 400
TOLERANCE UNLESS OTHERWISE SPECIFIED									
	±0.15	±0.2	±0.3	±0.4	±0.5	±0.6	±0.8	±1	±1.2
ANGULAR TOLERANCE ±2°									

A ⁄ LINE DRAWN THROUGH A PART NUMBER INDICATES THAT PHYSICAL PARTS ARE NOT AVAILABLE FOR ORDERING.

PART NUMBERS THAT DO NOT HAVE A LINE PRESENT INDICATE THAT PHYSICAL PARTS ARE AVAILABLE FOR ORDERING.

CONTACT APTIV SALES TO ASSURE AVAILABILITY OF PARTS.

DWG TYPE: PART DRAWING

STYLE:

VOLUME (CM³): SEE CHART

DISTR CODE: D

UNLESS OTHERWISE SPECIFIED

THIS DOCUMENT IS IN ACCORDANCE WITH ASME Y14.5M-1994 AS AMENDED BY THE GM GLOBAL DIMENSIONING AND TOLERANCING ADDENDUM - 1997. ALL GEOMETRIC TOLERANCES AND RELATED DATUMS APPLY RFS. RULE #1(PERFECT FORM AT MMC) DOES NOT APPLY WHEN RELATIONSHIP BETWEEN FEATURES IS ESTABLISHED BY ORIENTATION OR LOCATION TOLERANCES. SEPARATE POSITION CALLOUTS MAY BE GAGED SEPARATELY, REGARDLESS OF DATUM REFERENCE.

ALL DIMENSIONS ARE IN MILLIMETERS

REFERENCE

THIRD ANGLE PROJECTION

DO NOT SCALE
USE MATH DATA

CAD NX

•APTIV•

CONNECTION SYSTEMS

Anting, China

COPYRIGHT 2020 APTIV. ALL RIGHTS RESERVED.

THIS DRAWING IS THE PROPERTY OF APTIV AND CONTAINS APTIV CONFIDENTIAL INFORMATION. THE REPRODUCTION, DISTRIBUTION AND UTILIZATION OF THIS DOCUMENT OR ITS RELATED CAD MATH DATA, AS WELL AS COMMUNICATION OF ANY CONTENT TO OTHERS, WITHOUT EXPRESS AUTHORIZATION, IS PROHIBITED.

	DATE
DR	
APVD1 BAI ZAIYUN	25AU20
APVD2 ZHOU KEVIN HUI	25AU20
APVD3 HUANG SUIBIN	25AU20
APVD4	
APVD5	

SUBSTANCES OF CONCERN AND RECYCLED CONTI0949001 I0949001

MATERIAL: SEE CHART

DRAWING NAME: ASM CONN 96 F 1.2 MCP SLD

DRAWING NUMBER: 35447325

SIZE	SCALE	FRAME NO	SHEET NO	STG	REV	N/P
A1	2:1	1 OF 1	1 OF 1	R	01	-

PART NO	REV	N/P	ASSY HOUSING	RETAINER ASSY WITH BLOCK SEAL
35447325	01	-	35447322	15494610

Part: 35447325-CUS01-S01/01 Date: 26-Aug-20 Time: 11:06:29
35447325_DRW.zip,08262020,11:05,1048pass.cus