SYMBOL DEFINITION		
A DIMENSION WITHOUT AN INSPECTION REPORT SYMBOL (⬭) DOES NOT REQUIRE INSPECTION. IT MAY BE CONTROLLED ON THE INDIVIDUAL COMPONENT DRAWING.	TOTAL NO OF INSPECTIONS REQUIRED	10
	LAST NO. USED	10

DWG STATUS					ZONE	REVISION HISTORY	AUTH	DR	APVD 1	APVD 2
DATE	STG	REV	N/P	CHG						
10JA18	R	01	-	-		CREATE NEW DRAWING	432590	HP	HP	ZFW
10AP19	R	02	-	-		DIM #9 WAS 17.32 DIM #2 WAS 16.5	N/A	HP	JYC	SBH
09JA20	R	02	AA	-		ADD MORE TERMINAL AND CABLE SEAL INFORMATION	N/A	CDL	K.Z	HSB

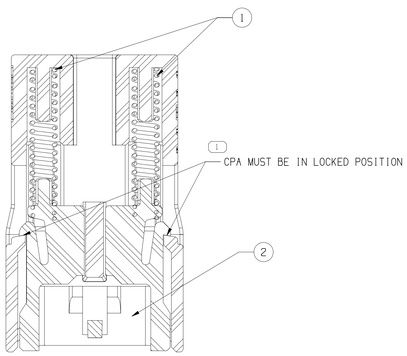

SECTION B-B

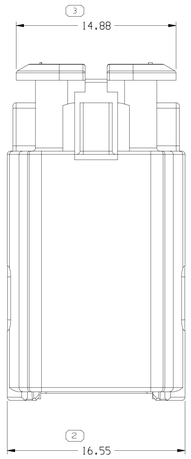

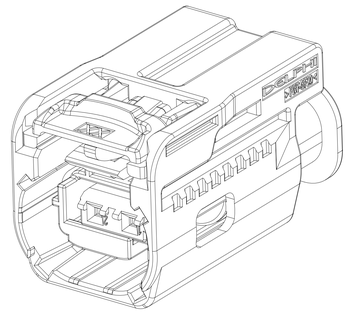

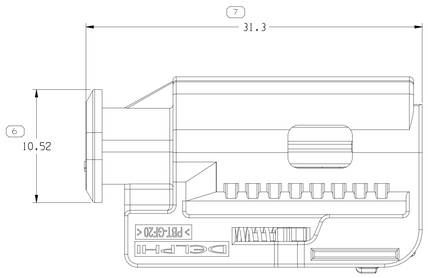

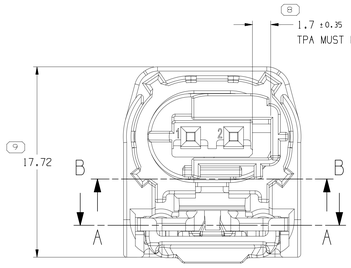

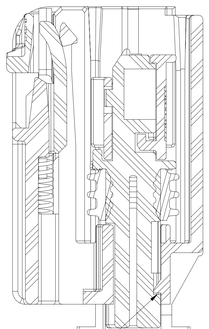

SECTION C-C

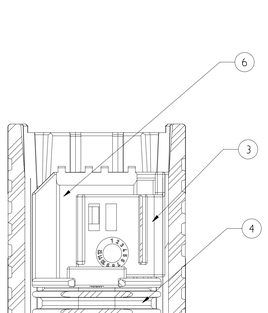

SECTION A-A

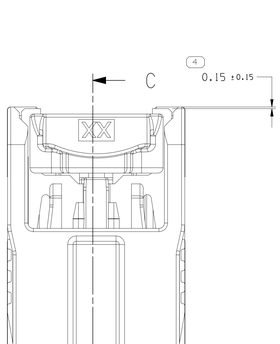

NOTES

1. UNLESS OTHERWISE SPECIFIED AND/OR INDICATED:

   DIMENSIONS ARE TO FACE OF VIEW SHOWN AND AUTOMATICALLY ROUNDED BY COMPUTER FOR INSPECTION (SEE MATH MODEL FOR PRECISE DIMENSIONS). FOR ALL OTHER DIMENSIONS NOT SHOWN BUT REQUIRED FOR TOOL BUILD, SEE MATH MODEL FOR PRECISE TOOL PATH DATA.

2. FOR APPLICATION DATA SEE THE INDIVIDUAL APPLICATION DRAWINGS.

3. TERMINAL APPLICATION :
   TYCO MQS 064 FEMALE TERMINAL :
   13896507 :0.35-0.5MM2
   13896517 :0.5-0.75MM2

   APTIV MTS 064 FEMALE TERMINAL :
   13580650 :0.25-0.35MM2
   13580652 :0.5-0.75MM2

   CABLE SEAL:
   15327913 :0.25-0.35MM2
   15327918 :0.5-0.75MM2

4. MATING PART
   RECEPTACLE MALE ASM HOUSING 2 WAY DWG-NO.:35033460

	35033433		ASM CONN 2 F MTS-B 0.64 SLD	01	1
6		35033434	CONN 2 F MTS-B 0.64 BLK SLD M4629	01	1
5		35033435	CONN 2 F MTS-B 0.64 YEL SLD M4629	02	1
4		13542753	SEAL CONN INTERFACE NAT	01	1
3		35033436	LOCK SECONDARY TPA NAT M4629	01	1
2		35033452	LOCK CPA NAT M4629	02	1
1		35033459	LOCK SPRING	01	2
NO	ASM NO	PART NO	MATERIAL SPECIFICATION AND COLOR	REV	VOL

A ——— LINE DRAWN THROUGH A PART NUMBER INDICATES THAT PHYSICAL PARTS ARE NOT AVAILABLE FOR ORDERING.

PART NUMBERS THAT DO NOT HAVE A LINE PRESENT INDICATE THAT PHYSICAL PARTS ARE AVAILABLE FOR ORDERING.

CONTACT APTIV SALES TO ASSURE AVAILABILITY OF PARTS.

DWG TYPE: PART DRAWING

STYLE:

VOLUME (CM³): SEE CHART

DISTR CODE:

UNLESS OTHERWISE SPECIFIED

THIS DOCUMENT IS IN ACCORDANCE WITH ASME Y14.5M-1994 AS AMENDED BY THE GM GLOBAL DIMENSIONING AND TOLERANCING ADDENDUM 2001. SEPARATE PATTERNS OF FEATURES MAY BE GAGED SEPARATELY REGARDLESS OF DATUM REFERENCES.

ALL DIMENSIONS ARE IN MILLIMETERS

REFERENCE

(5) PROCESS SENSITIVE DIMENSION

DIMENSIONS ENCLOSED IN ( ) INDICATE REFERENCE DIMENSIONS AND NO TOLERANCE LIMITS ARE ESTABLISHED

DIMENSIONAL RANGE (MM)									CHART M
FROM	> 0	> 6	> 30	> 70	>120	>160	>200	>250	>315
TO	6	30	70	120	160	200	250	315	400
TOLERANCE UNLESS OTHERWISE SPECIFIED	±0.1	±0.2	±0.3	±0.4	±0.45	±0.55	±0.7	±0.85	±1.05
ANGULAR TOLERANCE ±1°									

THIRD ANGLE PROJECTION

DO NOT SCALE

USE MATH DATA

NX

•APTIV•

CONNECTION SYSTEMS
Anting, China

COPYRIGHT APTIV, ALL RIGHTS RESERVED.

THIS DRAWING IS THE PROPERTY OF APTIV AND CONTAINS APTIV CONFIDENTIAL INFORMATION. THE REPRODUCTION, DISTRIBUTION AND UTILIZATION OF THIS DOCUMENT OR ITS RELATED CAD MATH DATA, AS WELL AS COMMUNICATION OF ANY CONTENT TO OTHERS, WITHOUT EXPRESS AUTHORIZATION, IS PROHIBITED.

	DATE
DR	
APVD1 HUA PAN	10JA18
APVD2 HUA PAN	10JA18
APVD3 ZHEFENG WU	10JA18
APVD4	
APVD5	

SUBSTANCES OF CONCERN AND RECYCLED CONTENT PER APTIV 10949001

MATERIAL: SEE CHART

DRAWING NAME: ASM CONN 2 F MTS-B 0.64 SLD

DRAWING NUMBER: 35033433

SIZE	SCALE	FRAME NO	SHEET NO	STG	REV	N/P
A0	5:1	1 OF 1	1 OF 1	R	02	AA

User: FJFIN
Form: 0013243C rev 001
Size: A0 (841.00 x 1189.00)
Date: 16-Jan-20 Time: 13:06:39