KEY PRODUCT CHARACTERISTICS			
SAFETY/COMPLIANCE	FIT/FUNCTION	TOTAL ON DRAWING	0
S/C CHECKPOINTS	F/F CHECKPOINTS	LAST NO. USED	0

NO & TYPE	DESCRIPTION	RATIONALE	PTS	ZONE

SYMBOL DEFINITION		
A DIMENSION WITHOUT AN INSPECTION REPORT SYMBOL DOES NOT REQUIRE INSPECTION. IT MAY BE CONTROLLED ON THE INDIVIDUAL COMPONENT DRAWING.	TOTAL NO OF INSPECTIONS REQUIRED	21
	LAST NO. USED	22

MISSING SYMBOLS: 16

DWG STATUS										
DATE	STG	REV	N/P	CHG	ZONE	REVISION HISTORY	AUTH	DR	APVD1	APVD2
26AU20	R	01	-	-		PART DRAWING CREATED.	445843	ZML	HZ	SBH
10SE20	R	01	AA	-		ADD NEW PN 35497055, 35497056, 35497057	445920	ZML	HZ	SBH

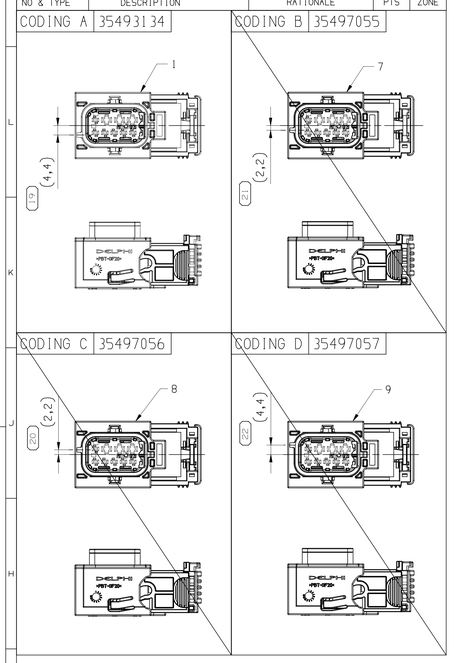

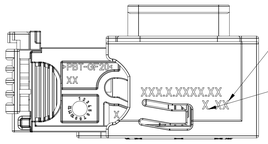

1 TOOL CAVITY NUMBER / FORMAT ACCORDING TO DIN 1451: H=2 MM
NESTKENNZEICHNUNG / SCHRIFTART NACH DIN 1451: H=2 MM

2 INDEX REPLACEMENT INSERT/ FORMAT ACCORDING TO DIN 1451: H=2 MM
WECHSELEINSATZ INDEXSTEMPEL/ SCHRIFTART NACH DIN 1451: H=2 MM

B-B

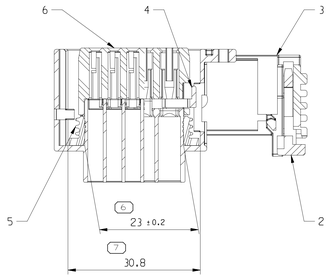

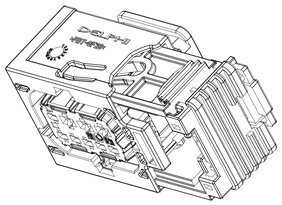

X
SEAL AREA

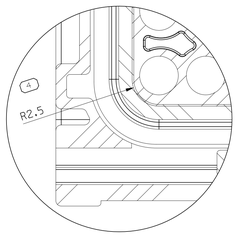

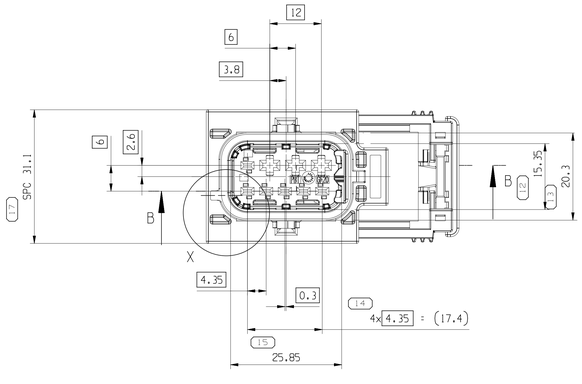

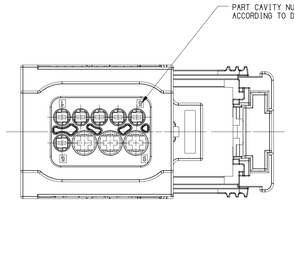

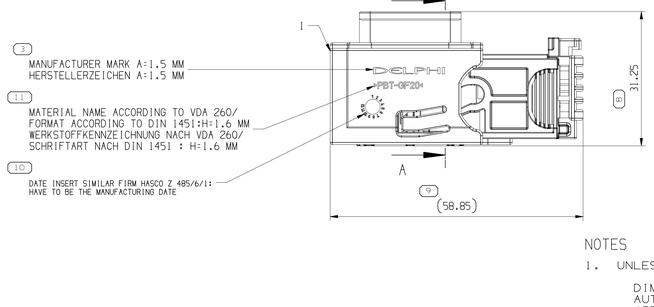

A-A

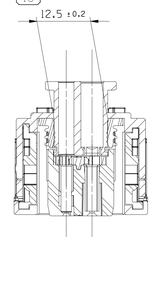

VAR	COD	POS	TITLE	PART-NO.	AMOUNT	CAD PART-REV	DATE	MATERIAL	RAL
1	A	-	CONNECTOR 9 WAY SEALED	35493134	---	01	26AU20	-	---
		1	RECEPTACLE HOUSING 9 WAY	33115979	1	---	---	PBT GF20 BLK	9011
		2	CPA	35439458	1	---	---	PA6 RED	3000
		3	MOUNTING SLIDE	13719684	1	---	---	PBT GF20 BLK	9011
		4	SECONDARY LOCK	33116053	1	---	---	PBT GF20 VLT	4006
		5	HOUSING SEAL	13719689	1	---	---	SILICON 50 SHORE GRN	6010
		6	MODULE 9 WAY	33116054	1	---	---	PBT GF20 BLK	9011
2	B	-	CONNECTOR 9 WAY SEALED	35497055	---	01	10SE20	-	---
		7	RECEPTACLE HOUSING 9 WAY	33115978	1	---	---	PBT GF20 BLK	9011
		2	CPA	35439458	1	---	---	PA6 RED	3000
		3	MOUNTING SLIDE	13719684	1	---	---	PBT GF20 BLK	9011
		4	SECONDARY LOCK	33116053	1	---	---	PBT GF20 VLT	4006
		5	HOUSING SEAL	13719689	1	---	---	SILICON 50 SHORE GRN	6010
		6	MODULE 9 WAY	33116054	1	---	---	PBT GF20 BLK	9011
3	C	-	CONNECTOR 9 WAY SEALED	35497056	---	01	10SE20	-	---
		8	RECEPTACLE HOUSING 9 WAY	33115971	1	---	---	PBT GF20 BLK	9011
		2	CPA	35439458	1	---	---	PA6 RED	3000
		3	MOUNTING SLIDE	13719684	1	---	---	PBT GF20 BLK	9011
		4	SECONDARY LOCK	33116053	1	---	---	PBT GF20 VLT	4006
		5	HOUSING SEAL	13719689	1	---	---	SILICON 50 SHORE GRN	6010
		6	MODULE 9 WAY	33116054	1	---	---	PBT GF20 BLK	9011
4	D	-	CONNECTOR 9 WAY SEALED	35497057	---	01	10SE20	-	---
		9	RECEPTACLE HOUSING 9 WAY	33116049	1	---	---	PBT GF20 BLK	9011
		2	CPA	35439458	1	---	---	PA6 RED	3000
		3	MOUNTING SLIDE	13719684	1	---	---	PBT GF20 BLK	9011
		4	SECONDARY LOCK	33116053	1	---	---	PBT GF20 VLT	4006
		5	HOUSING SEAL	13719689	1	---	---	SILICON 50 SHORE GRN	6010
		6	MODULE 9 WAY	33116054	1	---	---	PBT GF20 BLK	9011

TITLE	PART-NO.:	CABLE DIAMETER	MATERIAL	NOTES
CABLE SEAL CTS 1.5	15327913	1.2 - 1.6	SILICONE	
	15327918	1.2 - 2.0	SILICONE	OR SIMILAR
	15339412	1.9 - 2.4	SILICONE	
CABLE SEAL CTS 2.8	15339967	1.4 - 2.1	SILICONE	OR SIMILAR
	15339838	2.2 - 3.0	SILICONE	
BLIND PLUG CTS 1.5	12198198	---	SILICONE	OR SIMILAR
BLIND PLUG CTS 2.8	12059168	---	SILICONE	OR SIMILAR

TITLE	PART-NO.:	CABLE CROSS SECTION (MM²)	SURFACE
FEMALE TERMINAL CTS 1.5	13611693	0.5 - 1.0	AG
	13626012	1.0 - 1.5	AG
FEMALE TERMINAL CTS 2.8	13799600	0.5 - 1.0	AG
	13799602	1.5 - 2.5	AG

NOTES

1. UNLESS OTHERWISE SPECIFIED AND/OR INDICATED:

   DIMENSIONS ARE TO FACE OF VIEW SHOWN AND AUTOMATICALLY ROUNDED BY COMPUTER FOR INSPECTION (SEE MATH MODEL FOR PRECISE DIMENSIONS). FOR ALL OTHER DIMENSIONS NOT SHOWN BUT REQUIRED FOR TOOL BUILD, SEE MATH MODEL FOR PRECISE TOOL PATH DATA.

2. FOR APPLICATION DATA SEE THE APPLICATION DRAWING.

REMARKS:

-MAXIMUM DRAFT ANGLE 0° 30'
-LETTERS AND ENGRAVINGS 0.2 MM RAISED
-MATING PARTS:
 CAP: DWG-NO.: 33123554
 CAP: DWG-NO.: 33123556
-NO CONTAMINATION VISIBLE UNDER RATED ILLUMINANCE CONDITIONS (750 LUX) WITHOUT VISUAL MAGNIFICATION EQUIPMENT, WHICH CAN AFFECT THE FUNCTION OF THE PART. VALID FOR THE FIRST CUSTOMER INCOMING AREA.

A LINE DRAWN THROUGH A PART NUMBER INDICATES THAT PHYSICAL PARTS ARE NOT AVAILABLE FOR ORDERING.

PART NUMBERS THAT DO NOT HAVE A LINE PRESENT INDICATE THAT PHYSICAL PARTS ARE AVAILABLE FOR ORDERING.

CONTACT APTIV SALES TO ASSURE AVAILABILITY OF PARTS.

DWG TYPE: PART DRAWING

STYLE

VOLUME (CM³)

DISTR CODE

UNLESS OTHERWISE SPECIFIED
THIS DOCUMENT IS IN ACCORDANCE WITH ASME Y14.5-2009, SEE APTIV ENGINEERING DESIGN STANDARD B6-2017 FOR ISO 11012004 RECONCILIATION REQUIREMENTS.

ALL DIMENSIONS ARE IN MILLIMETERS

REFERENCE

(17) PROCESS SENSITIVE DIMENSION

DIMENSIONS ENCLOSED IN ( ) INDICATE REFERENCE DIMENSIONS AND NO TOLERANCE LIMITS ARE ESTABLISHED

DIMENSIONAL RANGE (MM)									CHART E1
FROM	> 0	> 20	> 30	> 70	>100	>150	>200	>250	>300
TO	20	30	70	100	150	200	250	300	400
TOLERANCE UNLESS OTHERWISE SPECIFIED									
	±0.15	±0.2	±0.3	±0.4	±0.5	±0.6	±0.8	±1	±1.2
ANGULAR TOLERANCE ±2°									

THIRD ANGLE PROJECTION

DO NOT SCALE
USE MATH DATA

NX

•APTIV•
CONNECTION SYSTEMS
Anting, China

COPYRIGHT 2020 APTIV. ALL RIGHTS RESERVED.

THIS DRAWING IS THE PROPERTY OF APTIV AND CONTAINS APTIV CONFIDENTIAL INFORMATION. THE REPRODUCTION, DISTRIBUTION AND UTILIZATION OF THIS DOCUMENT OR ITS RELATED CAD MATH DATA, AS WELL AS COMMUNICATION OF ANY CONTENT TO OTHERS, WITHOUT EXPRESS AUTHORIZATION, IS PROHIBITED.

		DATE
DR		
APVD1	LIU ZHIMIAO	26AU20
APVD2	ZHOU HUI	26AU20
APVD3	HUANG SUIBIN	26AU20
APVD4		
APVD5		

SUBSTANCES OF CONCERN AND RECYCLED CONT[1094900] [1094901]

MATERIAL: SEE CHART / SIEHE TABELLE

DRAWING NAME: ASM CONN 9 F CTS 150 280 SLD

DRAWING NUMBER: 35493134

SIZE	SCALE	FRAME NO	SHEET NO	STG	REV	N/P
A0	2:1	1 OF 1	1 OF 1	R	01	AA

User: FZhx
Path: 9941@cn-cfs8ts-cfs01@A
Form: 9941@cn-cfs8ts-cfs01@A - Dated: 10-Sep-20 Time: 15:29:11