	60WAY FEMALE CONNECTOR CODING			
MVL PART NUMBER	F001300	F101300	F201300	F301300
MVL REVISION	B	B	B	B
APTIV PART NUMBER	13854846	13854822	13854835	13854828
DESIGNATION	60W FEMALE CONNECTOR BLACK	60W FEMALE CONNECTOR YELLOW	60W FEMALE CONNECTOR BLUE	60W FEMALE CONNECTOR BROWN
CONNECTOR CODING	(see drawing)			
CARRIER CODING	(see drawing)			

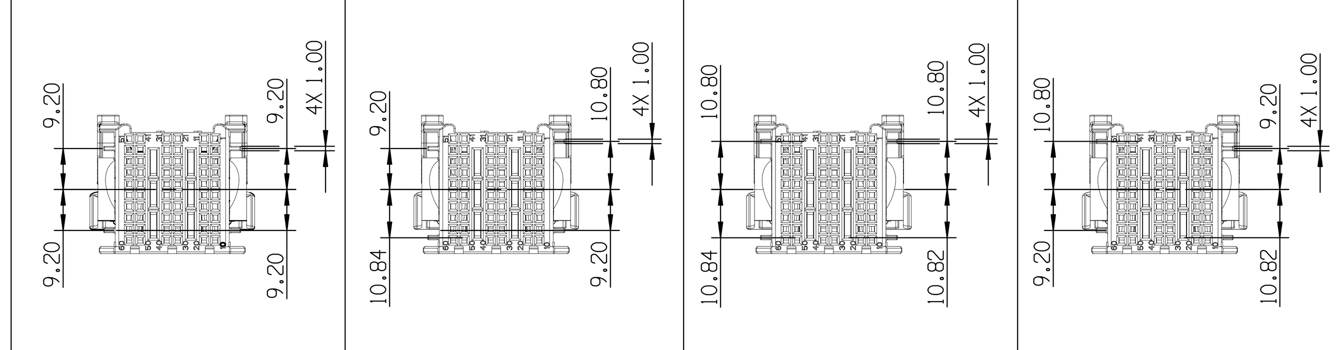

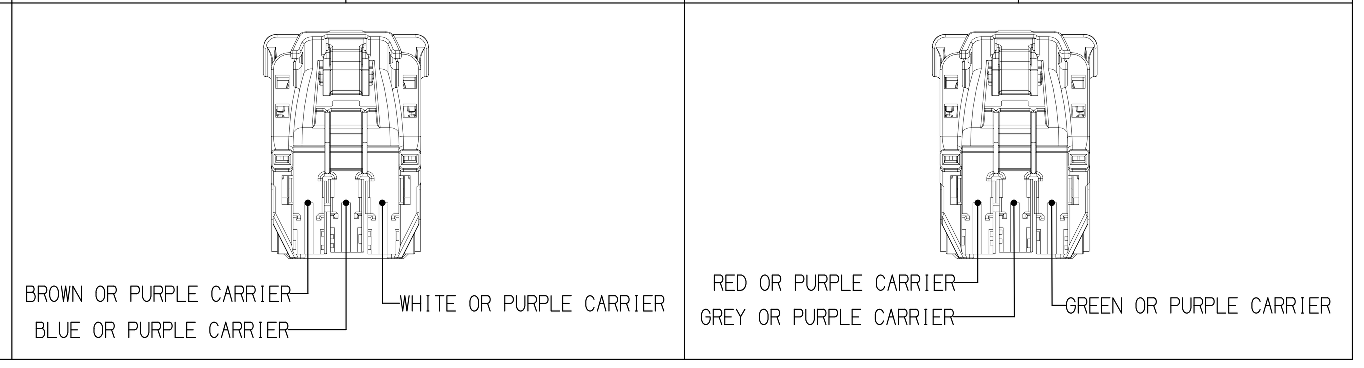

60WAY FEMALE CONNECTOR CODING

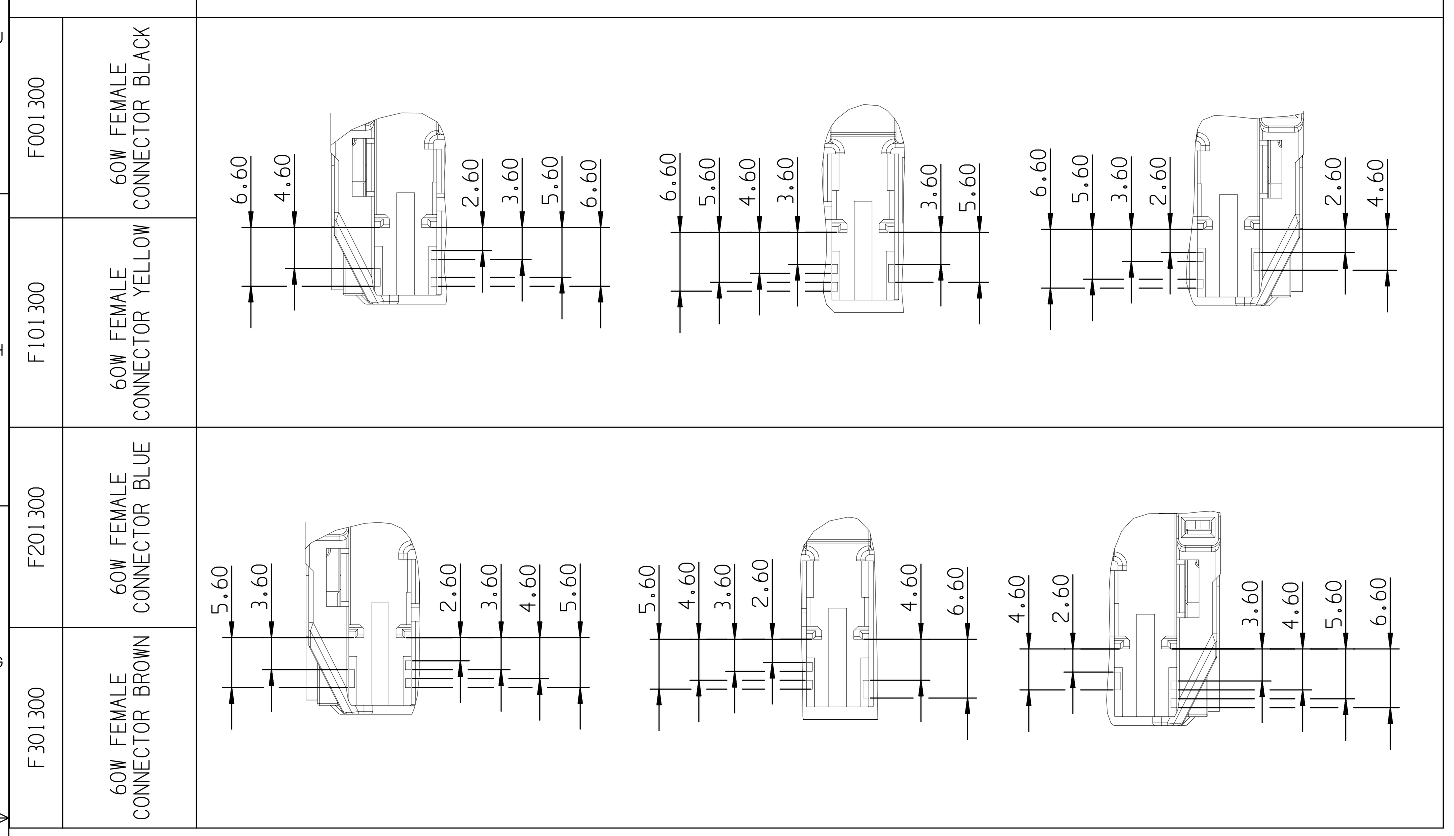

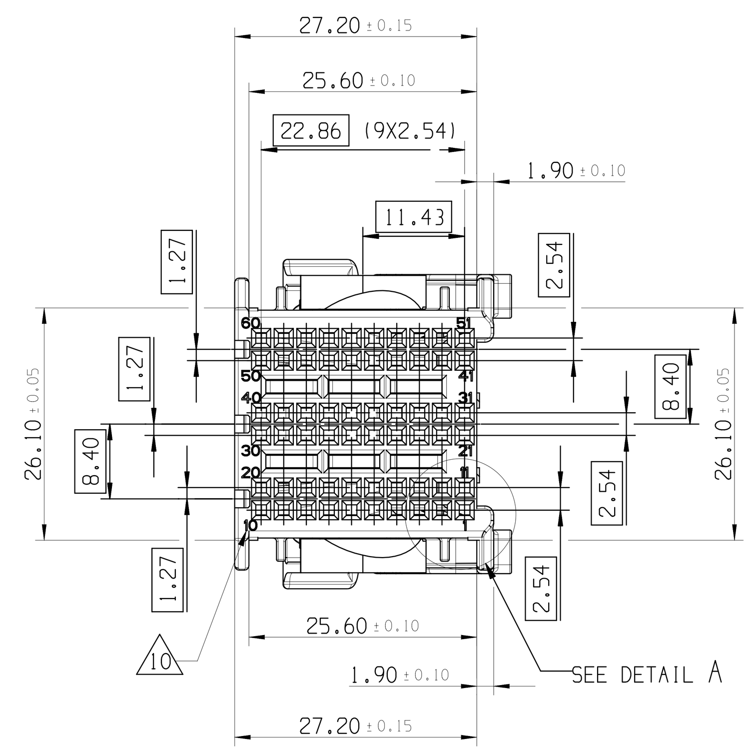

DETAIL A
SCALE 4:1

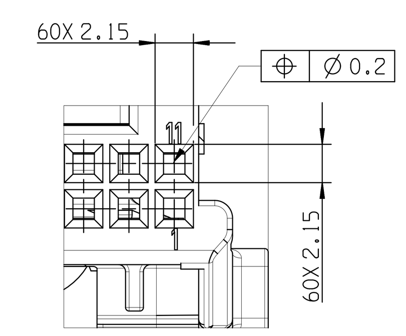

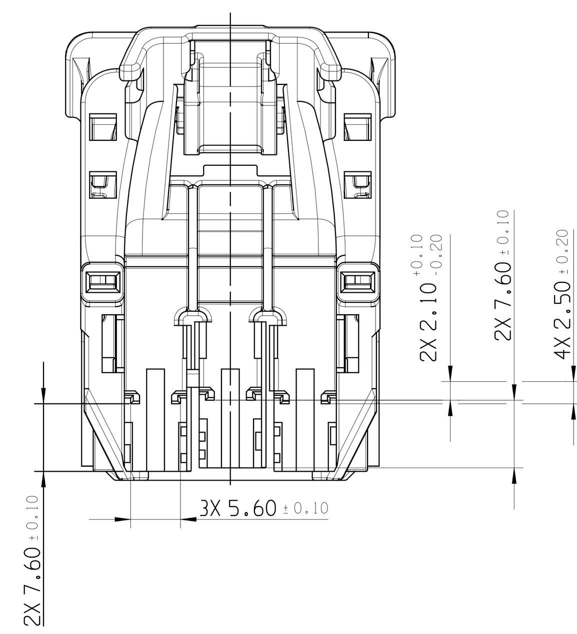

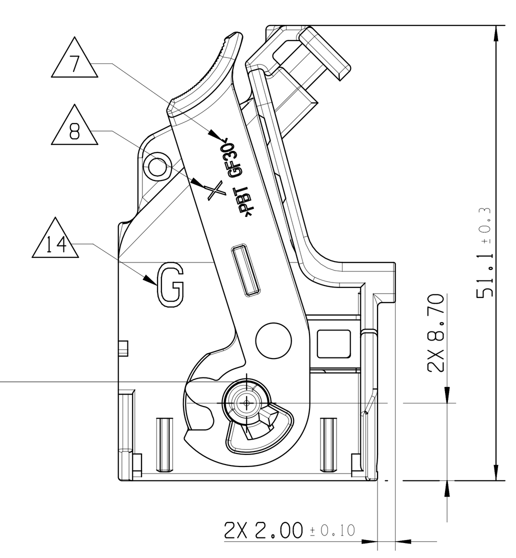

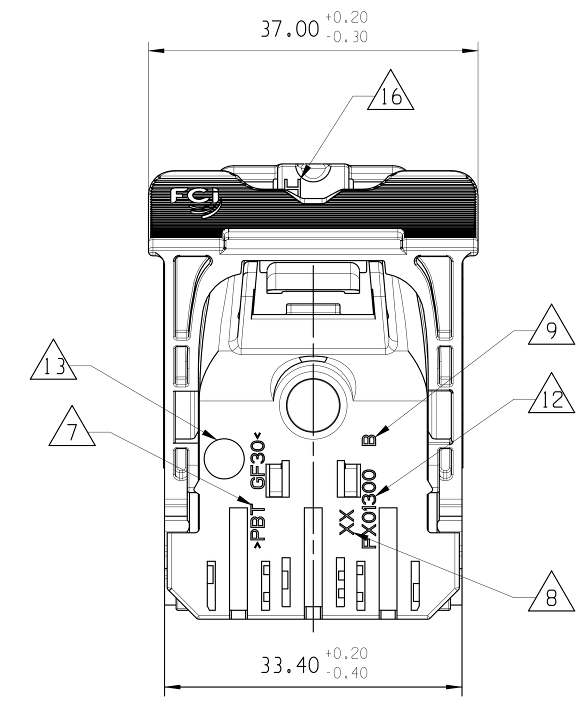

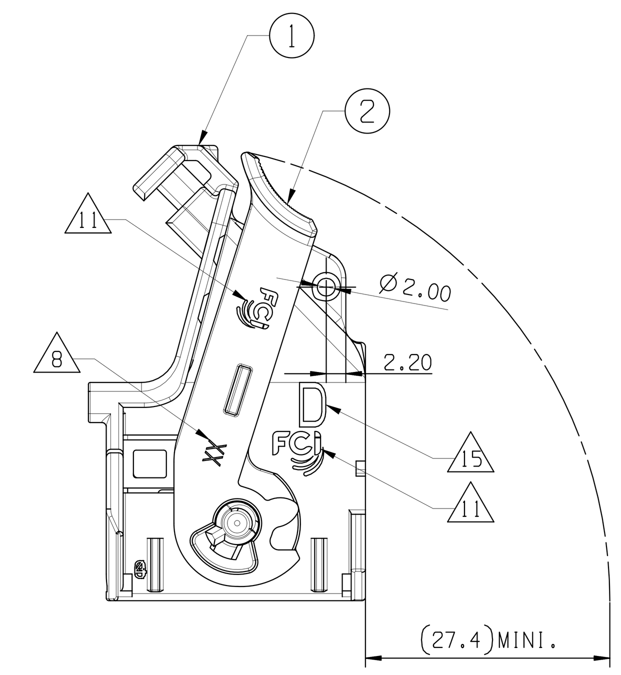

ASSOCIATED PARTS (FOR INFORMATION)		
DESCRIPTION	MVL P/N	APTIV P/N
20-WAY MODULE BROWN	F070300	13851312
20-WAY MODULE BLUE	F170300	13851311
20-WAY MODULE WHITE	F270300	13851310
20-WAY MODULE RED	F370300	13852932
20-WAY MODULE GREY	F470300	13852936
20-WAY MODULE GREEN	F570300	13852930
20-WAY MODULE VIOLET	F670300	33502230

CODING	MVL P/N	APTIV P/N	DESCRIPTION	MVL P/N	MVL REV.	APTIV PART NUMBER	MATERIAL	COLOR	NO.
60W FEMALE CONNECTOR BROWN	F301300	13854828	FEMALE HOUSING	S490300	A	33508441	PA 66 GF30	BROWN	1
			LEVER	S650300	C	33508499	PA 66 GF30	GREY	2
60W FEMALE CONNECTOR BLUE	F201300	13854835	FEMALE HOUSING	S390300	A	33507024	PA 66 GF30	BLUE	1
			LEVER	S650300	C	33508499	PA 66 GF30	GREY	2
60W FEMALE CONNECTOR YELLOW	F101300	13854822	FEMALE HOUSING	S190300	A	33507023	PA 66 GF30	YELLOW	1
			LEVER	S650300	C	33508499	PA 66 GF30	GREY	2
60W FEMALE CONNECTOR BLACK	F001300	13854846	FEMALE HOUSING	S090300	A	33507022	PA 66 GF30	BLACK	1
			LEVER	S650300	C	33508499	PA 66 GF30	GREY	2

NOTE	SPECIFICATIONS
1	FEMALE CONNECTOR ACCORDING TO APTIV SPECIFICATION: CAQE TBD
2	FEMALE CONNECTOR ACCORDING TO: -TEMPERATURE CLASS T2 -ENGINE VIBRATOR CLASS V1 -SEALING CLASS E0
3	USER'S MANUAL: PU113
4	DELIVERY CONNECTOR WEIGHT : 11g
5	NO WAFER HINGE OR WAFER HINGE BROKEN ALLOWED
6	VISUAL DEFECTS ON NO FUNCTIONNAL AREAS ALLOWED
△7	MATERIAL MARKING
△8	MOLD CAVITY NUMBER
△9	PART REVISION NUMBER
△10	WAY NUMBER
△11	SUPPLIER LOGO
△12	PART NUMBER
△13	DATE INSERT
△14	WIRING OUT INDICATION (LEFT)
△15	WIRING OUT INDICATION (RIGHT)
△16	WIRING OUT INDICATION (HIGH)

DWG STATUS DATE	STG	REV	N/P	CHG	ZONE	REVISION HISTORY	AUTH	DR	APVD 1	APVD 2
11JA22	R	01				INITIAL RELEASE		P.BAL	J.LAL	J.MOI

3D VIEW

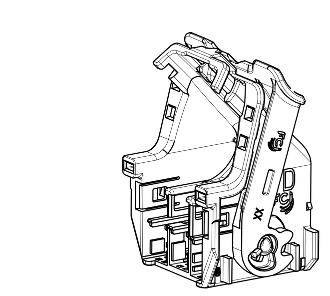

SCALE 1:1

A ——— LINE DRAWN THROUGH A PART NUMBER INDICATES THAT PHYSICAL PARTS ARE NOT AVAILABLE FOR ORDERING.

PART NUMBERS THAT DO NOT HAVE A LINE PRESENT INDICATE THAT PHYSICAL PARTS ARE AVAILABLE FOR ORDERING.

CONTACT APTIV SALES TO ASSURE AVAILABILITY OF PARTS.

R 0.1 MAX
R 0.2 MAX
SHARP CORNER TOLERANCE

DIM TO CHECK / ( ) DIM FOR HELP / THEORETIC DIM	DIMENSIONAL RANGE (MM) FROM / TO	>0 20	>20 30	>30 70	>70 100	>100 150	>150 200	>200 250	>250 300	>300 400
	TOLERANCE UNLESS OTHERWISE SPECIFIED (CHART E1)	±0.15	±0.2	±0.3	±0.4	±0.5	±0.6	±0.8	±1	±1.2

ANGULAR TOLERANCE ±2°

DWG TYP: CUSTOMER PART DRAWING
WEIGHT (GR): SEE TABLE
DISTR CODE: D
VOLUME (CM³): ---
ROUTING
UNLESS OTHERWISE SPECIFIED
GENERAL TOLERANCES ACCORDING TO: SEE CHART
GD&T ACCORDING TO: ISO 1101
REFERENCE
FIRST ANGLE PROJECTION
DO NOT SCALE
USE MATH DATA
CAD NX

•APTIV•
CONNECTION SYSTEMS
Chennai, India

COPYRIGHT 2022 APTIV. ALL RIGHTS RESERVED.

THIS DRAWING IS THE PROPERTY OF APTIV AND CONTAINS APTIV CONFIDENTIAL INFORMATION. THE REPRODUCTION, DISTRIBUTION AND UTILIZATION OF THIS DOCUMENT OR ITS RELATED CAD MATH DATA, AS WELL AS COMMUNICATION OF ANY CONTENT TO OTHERS, WITHOUT EXPRESS AUTHORIZATION, IS PROHIBITED.

		DATE
DR	P.BALAJI	11JA22
APVD1	J.LALU	11JA22
APVD2	MOINEAU JOHANN	11JA22
APVD3		
APVD4		
APVD5		

SUBSTANCES OF CONCERN AND RECYCLED CONTENT PER APTIV 10949001
MATERIAL: SEE TABLE
DRAWING NAME: 60W FEMALE CONNECTOR
DRAWING NUMBER: 13856931

SIZE	SCALE	FRAME NO	SHEET NO	STG	REV	N/P
A0	2:1	1 OF 1	1 OF 1	R	01	

User: KZ5GTM Part: 13856931-CUS02-S01/01 Date: 14-Feb-22 Time: 09:09:59
KZ5GTM,02142022,04:38,73pass,cus