SYMBOL DEFINITION		
A DIMENSION WITHOUT AN INSPECTION REPORT SYMBOL ( ) DOES NOT REQUIRE INSPECTION. IT MAY BE CONTROLLED ON THE INDIVIDUAL COMPONENT DRAWING.	TOTAL NO OF INSPECTIONS REQUIRED	25
	LAST NO. USED	26

MISSING SYMBOLS
14

DWG STATUS DATE	STG	REV	N/P	CHG	ZONE	REVISION HISTORY	AUTH	DR	APVD 1	APVD 2
22NO11	R	01	-	-	-	TAXI WAS 15364306	415928	POT	POT	ASG
24MY12	R	02	-	-	-	AT NOTE 3, CABLE SEAL PN. WAS 12089678 AT NOTE 3, THE TERMINALS PNS. WERE 12157739 & 12157740 CREATED THE APPLICATION DATA DRAWINGS FOR ALL THE PNS. THE N/P FIELD FOR ALL PNS. WAS AA	418325	HRS	DA	FLC
16JL12	R	03	-	-		UPDATED PDM ATTRIBUTES	418780	HRS	DWS	ASG
11SE14	R	04	-	-		ADDED SUB ASM IN THE TABLE	427595	BCR	POT	SCS
31OC23	R	05	-	-	-	DELETED SUB ASM IN THE TABLE REVISED COMPONENT TABLE	448948	EAN	MS	JAM

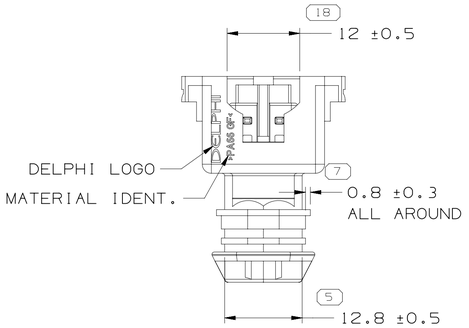

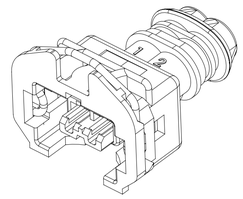

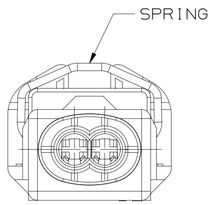

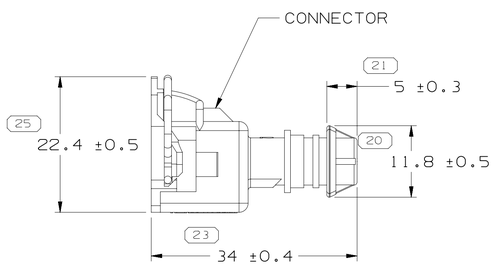

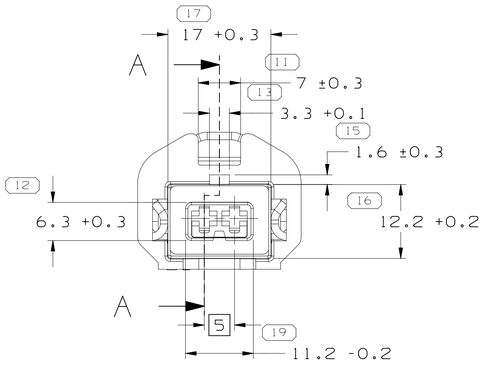

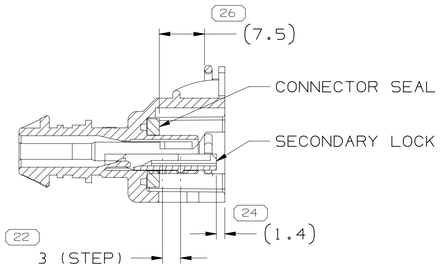

SECTION A - A

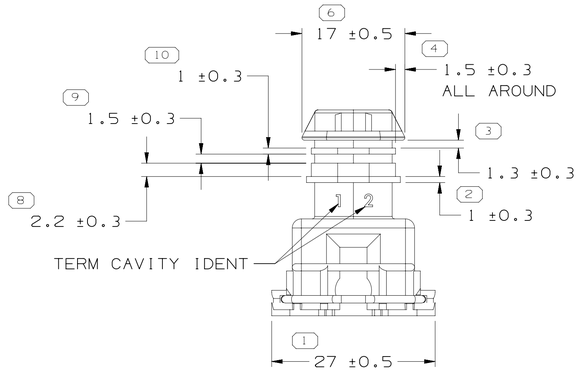

NOTES:

1. UNLESS OTHERWISE SPECIFIED AND/OR INDICATED:
   DIMENSIONS ARE TO FACE OF VIEW SHOWN AND AUTOMATICALLY ROUNDED BY COMPUTER FOR INSPECTION. (SEE MATH MODEL FOR PRECISE DIMENSIONS.) FOR ALL OTHER DIMENSIONS NOT SHOWN BUT REQUIRED FOR TOOL BUILD, SEE MATH MODEL FOR PRECISE TOLL PATH DATA.
2. MARKS:
   TOLL CAVITY IDENT, TERM CAVITY IDENT, MATERIAL IDENT. MANUFACTURING DATE AND SUPPLIER IDENT.
3. THIS PART ACCEPTS THE FOLLOWING COMPONENTS OR EQUIVALENT:
   TERMINAL - 12198102 AND 12198103
   CABLE SEAL - 15324976
4. FOR APPLICATION DATA SEE THE INDIVIDUAL APPLICATION DRAWINGS.

PART NUMBER	REV	N/P	CONNECTOR PART NUMBER	CONNECTOR MATERIAL SPEC & COLOR	SECONDARY LOCK PART NUMBER	SECONDARY LOCK MATERIAL SPEC & COLOR	CONN SEAL PART NUMBER	CONN SEAL MATERIAL SPEC & COLOR	SPRING PART NUMBER	SPRING MATERIAL SPEC & COLOR
15364313	03	AE	15368256	POLYAMIDE COMPOUND GRY	15327322	POLYAMIDE COMPOUND GRN	15368288	SILICONE RUBBER ORN	15368277	STAINLESS STEAL
15364312	03	AE	15368255	POLYAMIDE COMPOUND BRN						
15364311	03	AE	15368254	POLYAMIDE COMPOUND GRN						
15364310	03	AE	15368253	POLYAMIDE COMPOUND RED						
15364309	03	AE	15368252	POLYAMIDE COMPOUND BLK						
15364308	03	AE	15368251	POLYAMIDE COMPOUND BLU						
15364307	03	AE	15368250	POLYAMIDE COMPOUND YEL						
15364306	03	AE	15368249	POLYAMIDE COMPOUND WHT						

(N/A) PROCESS SENSITIVE DIMENSION

DIMENSIONS ENCLOSED IN ( ) INDICATE REFERENCE DIMENSIONS AND NO TOLERANCE LIMITS ARE ESTABLISHED

DIMENSIONAL RANGE (MM) FROM	> 0 TO 20	>20 30	>30 70	>70 100	>100 150	>150 200	>200 250	>250 300	>300 400
TOLERANCE UNLESS OTHERWISE SPECIFIED	±0.15	±0.2	±0.3	±0.4	±0.5	±0.6	±0.8	±1	±1.2
ANGULAR TOLERANCE ±2°									

CHART E1

A ——— LINE DRAWN THROUGH A PART NUMBER INDICATES THAT PHYSICAL PARTS ARE NOT AVAILABLE FOR ORDERING.

PART NUMBERS THAT DO NOT HAVE A LINE PRESENT INDICATE THAT PHYSICAL PARTS ARE AVAILABLE FOR ORDERING.

CONTACT APTIV SALES TO ASSURE AVAILABILITY OF PARTS.

DWG TYPE: PART DRAWING

STYLE

VOLUME (CM³)

DISTR CODE

UNLESS OTHERWISE SPECIFIED
THIS DOCUMENT IS IN ACCORDANCE WITH ASME Y14.5M-1994 AS AMENDED BY THE GM GLOBAL DIMENSIONING AND TOLERANCING ADDENDUM-2004.

ALL DIMENSIONS ARE IN MILLIMETERS

REFERENCE

FIRST ANGLE PROJECTION

DO NOT SCALE

USE MATH DATA

CAD NX

•APTIV•

CONNECTION SYSTEMS

Jambeiro, Brazil

COPYRIGHT 2011 APTIV. ALL RIGHTS RESERVED.

THIS DRAWING IS THE PROPERTY OF APTIV AND CONTAINS APTIV CONFIDENTIAL INFORMATION. THE REPRODUCTION, DISTRIBUTION AND UTILIZATION OF THIS DOCUMENT OR ITS RELATED CAD MATH DATA, AS WELL AS COMMUNICATION OF ANY CONTENT TO OTHERS, WITHOUT EXPRESS AUTHORIZATION, IS PROHIBITED.

		DATE
DR		
APVD1	P.TUDESCHINI	22NO11
APVD2	P. TUDESCHINI	22NO11
APVD3	ANTONIO GROPPO	22NO11
APVD4		
APVD5		

SUBSTANCES OF CONCERN AND RECYCLED CONTENT PER APTIV 1094900I

MATERIAL: SEE CHART

DRAWING NAME: TAXI ASM CONN 2 F 2.8 TIMER SLD MINI PWR

DRAWING NUMBER: 13928450

SIZE	SCALE	FRAME NO	SHEET NO	STG	REV	N/P
A1	2:1	1 OF 1	1 OF 1	R	05	-

User: TJ9064
Path: C:\Users\tj9064\Desktop\13928450-CUS01-SD1.05_Date: 06-Nov-23_Time: 09:39:52
Doc: 13928450_CUS01_SD1.05_20231106202309138.75pdms.pln