CODE A
SCALE: 2:1

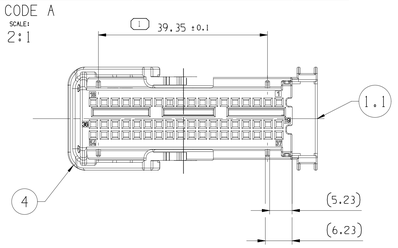

CODE B
SCALE: 2:1

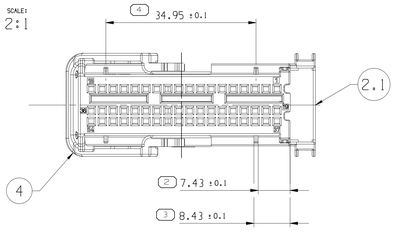

CODE C
SCALE: 2:1

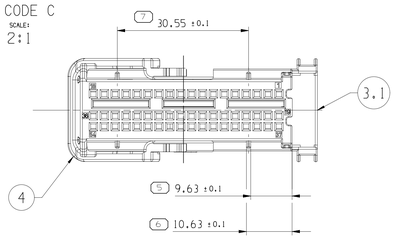

MOUNTING OPENING
SCALE: 2:1

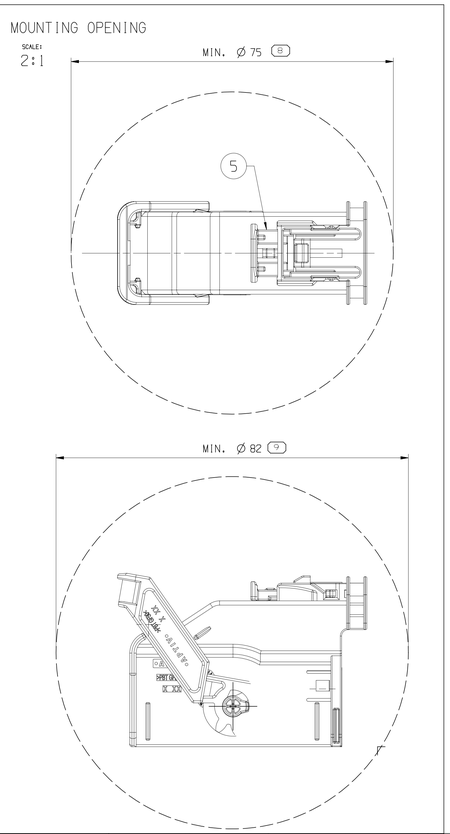

LEVEL	DESCRIPTION	APN	REV	QTY	MATERIAL	COLOR	WEIGHT (g)
1	ASM CONN 54 FEMALE MTS064 CODE A	35561470	01	-	-	-	-
1.1	54W COVER CODE A	35561475	01	1	PBT GF30	BLACK	22.7
4	LEVER	35561482	01	1	PBT GF30	NATURAL	2.97
5	CPA	35574026	01	1	PBT GF30	RED	0.62
2	ASM CONN 54 FEMALE MTS064 CODE B	35561504	01	-	-	-	-
2.1	54W COVER CODE B	35561509	01	1	PBT GF30	GRAY	22.7
4	LEVER	35561482	01	1	PBT GF30	NATURAL	2.97
5	CPA	35574026	01	1	PBT GF30	RED	0.62
3	ASM CONN 54 FEMALE MTS064 CODE C	35561511	01	-	-	-	-
3.1	54W COVER CODE C	35561512	01	1	PBT GF30	BLUE	22.7
4	LEVER	35561482	01	1	PBT GF30	NATURAL	2.97
5	CPA	35574026	01	1	PBT GF30	RED	0.62

SYMBOL DEFINITION

A DIMENSION WITHOUT AN INSPECTION REPORT SYMBOL (24) DOES NOT REQUIRE INSPECTION. IT MAY BE CONTROLLED ON THE INDIVIDUAL COMPONENT DRAWING.

TOTAL NO OF INSPECTIONS REQUIRED	28
LAST NO. USED	25

MISSING SYMBOLS
NO MISSING SYMBOL NUMBER

DWG STATUS						ZONE	REVISION HISTORY	AUTH	DR	APVD1	APVD2
DATE	STG	REV	N/P	CHG							
28AP21	R	01					CREATED PART DRAWING	446873		MJ	PP
17NO22	R	01	AA				ADD A NOTE	448554	MDC	HW	JZ
05JU23	R	01	AB				UPDATE SPC DIMENSION NUMEBR	449285	CMD	HW	JZ

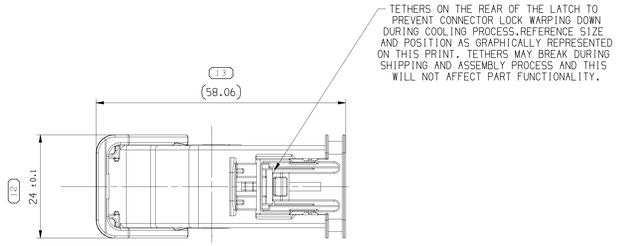

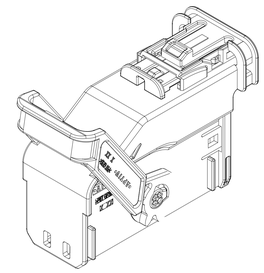

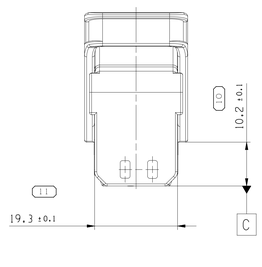

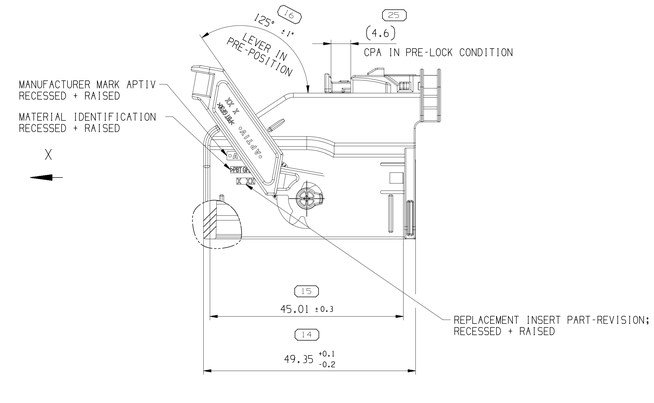

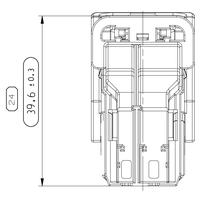

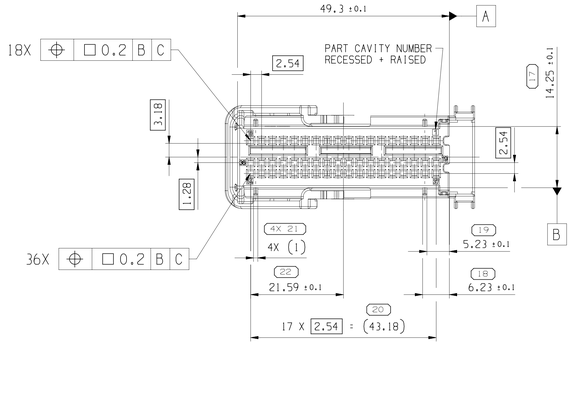

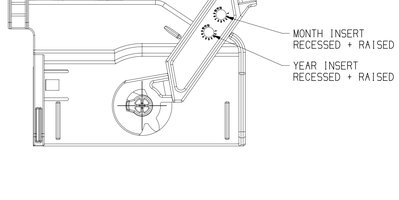

NOTES:

1 NOT DIMENSIONED GEOMETRY HAS TO BE TAKEN FROM THE CORRESPONDING 3D DATA-FILE
2 MAXIMUM DRAFT ANGLE 0°30'
3 LETTERS AND ENGRAVINGS 0.1 MM RECESSED / RAISED
4 SPC: STATISTICAL PROCESS CONTROL
5 MATING PARTS: 35561494, 35561496
6 MATING INTERFACE : DWG-NO.: 35570305-CUS01-S02.
7 FOR APPLICATION DATA SEE THE INDIVIDUAL APPLICATION DRAWINGS.

A ——— LINE DRAWN THROUGH A PART NUMBER INDICATES THAT PHYSICAL PARTS ARE NOT AVAILABLE FOR ORDERING.

PART NUMBERS THAT DO NOT HAVE A LINE PRESENT INDICATE THAT PHYSICAL PARTS ARE AVAILABLE FOR ORDERING.

CONTACT APTIV SALES TO ASSURE AVAILABILITY OF PARTS.

DWG TYPE: PART DRAWING

STYLE:

VOLUME (CM³): SEE CHART

DISTR CODE:

UNLESS OTHERWISE SPECIFIED
THIS DOCUMENT IS IN ACCORDANCE WITH ASME Y14.5-2009, SEE APTIV ENGINEERING DESIGN STANDARD 86 2017 FOR ISO 11012004 RECONCILIATION REQUIREMENTS.

ALL DIMENSIONS ARE IN MILLIMETERS

(24) PROCESS SENSITIVE DIMENSION

DIMENSIONS ENCLOSED IN ( ) INDICATE REFERENCE DIMENSIONS AND NO TOLERANCE LIMITS ARE ESTABLISHED

REFERENCE

DIMENSIONAL RANGE (MM)									CHART ID
FROM TO	> 0 6	> 6 30	> 30 70	> 70 120	>120 160	>160 200	>200 250	>250 315	>315 400
TOLERANCE UNLESS OTHERWISE SPECIFIED	±0.1	±0.2	±0.3	±0.4	±0.45	±0.55	±0.7	±0.85	±1.05
ANGULAR TOLERANCE ±1°									

THIRD ANGLE PROJECTION

DO NOT SCALE
USE MATH DATA

NX

DELPHI
CONNECTION SYSTEMS
Anting, China
COPYRIGHT 2021 APTIV. ALL RIGHTS RESERVED.
THIS DRAWING IS THE PROPERTY OF APTIV AND CONTAINS APTIV CONFIDENTIAL INFORMATION. THE REPRODUCTION, DISTRIBUTION AND UTILIZATION OF THIS DOCUMENT OR ITS RELATED CAD MATH DATA, AS WELL AS COMMUNICATION OF ANY CONTENT TO OTHERS, WITHOUT EXPRESS AUTHORIZATION, IS PROHIBITED.

	DATE
DR	
APVD1 MUGUNTHAN J	28AP21
APVD2 PRABHU P	28AP21
APVD3 MAODONG CHEN	28AP21
APVD4	
APVD5	

SUBSTANCES OF CONCERN AND RECYCLED CONT 0949001 0949001

MATERIAL: SEE CHART

DRAWING NAME: TAXI COV BACK

DRAWING NUMBER: 35561557

SIZE	SCALE	FRAME NO	SHEET NO	STG	REV	N/P
A0	2:1	1 OF 1	1 OF 1	R	01	AB

User: k44175
Dataset: 35561557-CUS01-S02-01-AB
Plot Scale: 2.0000 CM / 1 IN
Plot Date: 05-Jul-23 Time: 15:34:32