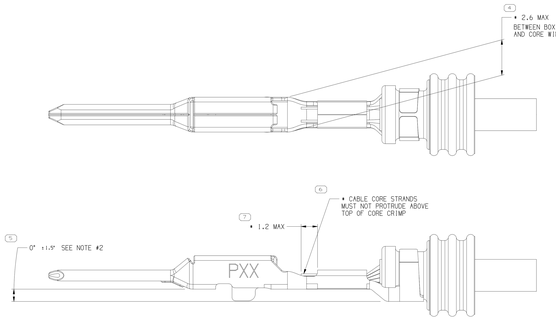

TERMINAL, CABLE ALIGNMENT & POSITION

SYMBOL DEFINITION			MISSING SYMBOLS
A DIMENSION WITHOUT AN INSPECTION REPORT SYMBOL ( ) DOES NOT REQUIRE INSPECTION. IT MAY BE CONTROLLED ON THE INDIVIDUAL COMPONENT DRAWING.	TOTAL NO OF INSPECTIONS REQUIRED	32	24
	LAST NO. USED	26	

DWG STATUS DATE	SIZE	REV	SHEET	DWG	ZONE	REVISION HISTORY	AUTH	DR	APVD	APVD
28MA14	R	01	-	-		13964784 - WAS PE215601 AND RELEASED 13964785 - WAS PE209218 AND RELEASED 13964786 - WAS PE209219 AND RELEASED	425988	APB	APB	RJB
06JN14	R	02	-	-		ALL PARTS - ADDED TYPICAL CABLE SEAL COLUMN ON CHART, TYPICAL CABLE SEAL & MATING COMPONENTS NOTES AND REVISED PERFORMANCE REQUIREMENT RATING NOTE	426692	APB	EVV	RJB
30SE14	R	03	-	-		ALL PARTS - REVISED PERFORMANCE REQUIREMENT RATING NOTE	427763	APB	APB	RJB
15JL15	R	04	-	-		ALL PARTS - REVISED CRIMP & PLATING TYPE NOTES 13964784 - CABLE DIA WAS 1.40 - 1.81; 13964785 - CABLE DIA WAS 1.40 - 1.83	430945	APB	APB	RDL
18SE20	R	05	-	-		ALL PARTS - UPDATED PART AVAILABILITY	552492	ADC	ADC	RBS

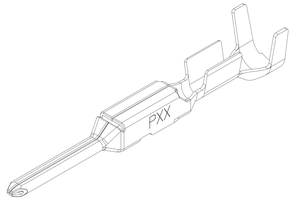

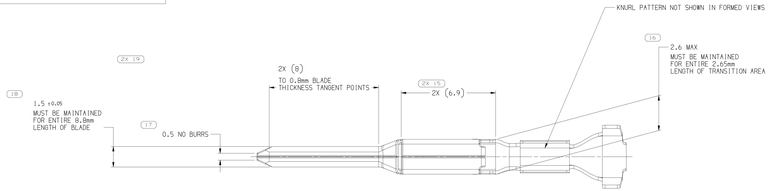

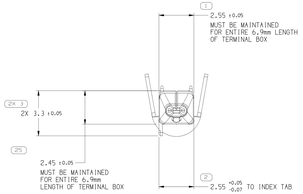

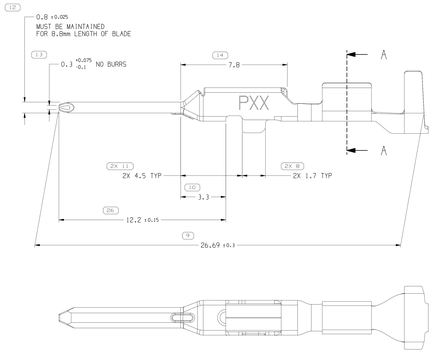

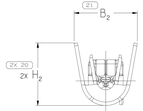

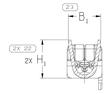

SECTION A-A

NOTES

1. UNLESS OTHERWISE SPECIFIED AND/OR INDICATED:

   DIMENSIONS ARE TO FACE OF VIEW SHOWN AND AUTOMATICALLY ROUNDED BY COMPUTER FOR INSPECTION (SEE MATH MODEL FOR PRECISE DIMENSIONS). FOR ALL OTHER DIMENSIONS NOT SHOWN BUT REQUIRED FOR TOOL BUILD, SEE MATH MODEL FOR PRECISE TOOL PATH DATA.

2. PLUS ANGLE IS WING BOTTOM SURFACE ROTATED COUNTERCLOCKWISE AGAINST THE BOX BOTTOM SURFACE.

3. MAXIMUM INSULATION CRIMP WIDTH OF 4.7mm AND HEIGHT OF 4.55mm FOR CABLE SIZE UP TO 2.34mm O.D. FOR CAVITY DIAMETER 4.8mm; MAXIMUM CORE CRIMP WIDTH OF 2.6mm.

4. PLATING TYPE:

   I. REFLOW TIN 1.9 - 3.3 MICROMETERS THICK OVER NICKEL UNDERPLATE 0.13 - 0.5 MICROMETERS THICK.

   II. SILVER 2.0 - 3.0 MICROMETERS THICK OVER NICKEL UNDERPLATE 0.127 -0.510 MICROMETERS THICK

   PLATING TYPE INFORMATION SHOWN ABOVE IS REFERENCE ONLY. PLATING REQUIREMENTS ARE CONTAINED IN APPLICABLE MATERIAL SPECIFICATION.

5. MAXIMUM CURRENT CAPACITY AS DEFINED BY USCAR-2 R5 SECTION 5.3.3 IS 20 AMPS WITH 1.0mm² COPPER CABLE

6. • DENOTES DIMENSIONS MADE AT CUT-OFF AND CRIMP DIE

7. PARTS MEET THE PERFORMANCE REQUIREMENTS OF GMW3191 DEC2007 AND SAE/USCAR-2 R5 REVISIONS FOR THE FOLLOWING CLASSIFICATIONS:

   TEMPERATURE CLASS 3 (-40°C TO 125°C)
   VIBRATION CLASS I (ON BODY OR CHASSIS)
   SEALING CLASS 2 OR 3 (SEALED - CONNECTOR & CABLE SEAL DEPENDENT)

8. REFERENCE MATING COMPONENTS OR EQUIVALENTS:

   TERMINAL 13919132

9. TYPICAL CABLE SEAL PART NUMBER IS A REFERENCE FOR A DELPHI CABLE SEAL THAT ACCEPTS CABLE SIZES SIMILAR TO THE CORRESPONDING TERMINAL AND MATES TO THE SAME CONNECTOR CAVITY. CABLE DIAMETER RANGE OF DESIRED APPLICATION NEEDS TO BE WITHIN ALLOWABLE RANGE SHOWN ON CABLE SEAL DRAWING

PART NUMBER	REV	N/P	MATERIAL DESCRIPTION	MATERIAL THICKNESS	CONTACT AREA PLATING TYPE (SEE NOTE 4)	CRIMP AREA PLATING TYPE (SEE NOTE 4)	CONTACT PLATING I.D.	CABLE I.D.	CABLE SIZE (mm²)	CABLE DIAMETER B_1 ±0.15	B_2 ±0.25	(H_1)	(H_2)	TYPICAL CABLE SEAL
13964786	01	AD	TIN PLATED COPPER ALLOY	0.25	1	1	SN	17	0.75 - 1	1.70 - 2.34	2.4	4.6	2.8	4.6	13834623
13964785	01	AD	TIN PLATED COPPER ALLOY	0.25	1	1	SN	21	0.35 - 0.5	1.20 - 1.83	1.9	4.55	2.25	4.4	13834623
13964784	01	AD	TIN PLATED COPPER ALLOY	0.25	1	1	SN	21	0.35 - 0.5	1.20 - 1.83	1.9	4.4	2.25	4.1	13834630
									COPPER						

DRAWING NUMBER 13954065
SIZE A1x3 | SCALE 1 | SHEET 1 OF 1 | REV R | 05

(3) PROCESS SENSITIVE DIMENSION
DIMENSIONS ENCLOSED IN ( ) INDICATE REFERENCE DIMENSIONS AND NO TOLERANCE REQUIRED UNLESS OTHERWISE SPECIFIED

DIMENSIONAL RANGE (MM)	CHAMF D
0 TO 3	>0
>3 TO 6	>0.2
>6	>0.4

TOLERANCE UNLESS OTHERWISE SPECIFIED
ANGULAR TOLERANCE ±2°

THIRD ANGLE PROJECTION

DO NOT SCALE
USE MATH DATA

NX

REFERENCE

APVD	ALAIN PREVOST	28MA14	B
APVD	ALAIN PREVOST	28MA14	
APVD	RAYMOND J. BLASKO	28MA14	
APVD			
APVD			

SUBSTANCES OF CONCERN AND RECYCLED CONTENT PER APTIV (DRAFTER)

MATERIAL
SEE CHART

ALL DIMENSIONS ARE IN MILLIMETERS

DRAWING TITLE
TAXI TERM M OCS 1.5 SEALED

DRAWING NUMBER 13954065
SIZE A1x3 | SCALE 1 | SHEET 1 OF 1 | REV R | 05

• APTIV •
CONNECTION SYSTEMS
WARREN, OH

COPYRIGHT 2014 APTIV. ALL RIGHTS RESERVED.
THIS DRAWING IS THE PROPERTY OF APTIV AND CONTAINS APTIV CONFIDENTIAL INFORMATION. THE INFORMATION CONTAINED IN THIS DOCUMENT OR UTILIZATION OF THIS DOCUMENT OR ITS RELATED CAD MATH DATA, MUST NOT BE COMMUNICATED OR MADE CONTENT TO OTHERS, WITHOUT EXPRESS AUTHORIZATION, IS PROHIBITED.

A ALL DRAWINGS THROUGH A PART NUMBER INDICATES THAT PHYSICAL PARTS ARE NOT AVAILABLE FOR ORDERING.

PART NUMBERS THAT DO NOT HAVE A LINE PRESENT INDICATE THAT PHYSICAL PARTS ARE NOT AVAILABLE FOR ORDERING.

CONTACT APTIV SALES TO ASSURE AVAILABILITY OF PARTS.

DWG TYPE
PART DRAWING

STYLE

VOLUME (CM³) | SYSTEM UNIT

UNLESS OTHERWISE SPECIFIED
THIS DOCUMENT IS IN ACCORDANCE WITH ASME Y14.5M-1994 UNLESS OTHERWISE SPECIFIED. DIMENSIONS AND TOLERANCING MAXIMUM MATERIAL, SEPARATE PATTERNS OF FEATURES MAY BE GAGED SEPARATELY REGARDLESS OF DATUM REFERENCES.

1394913 2

1 3954065