	-NOTES-
1	MATERIAL: HOUSING RESIN: PBT GF30, HB FLAMMABILITY, BLACK RETAINER RESIN: PBT GF30, HB FLAMMABILITY, BLACK MEET RoHS REQUIREMENT
2	PARTS MUST BE FREE FROM SILICONE,SOLVENTS,GREASE AND OIL
3	PARTS MUST BE FREE FROM ANY KIND OF MOULD RELEASE AGENTS
4	NO MARKS OR SCRATCHES ON ALL PARTS AND SURFACES PERMITTED
5	HOUSING MATERIAL IDENTIFICATION
6	PRODUCTION DATE CODE
7	FCI PART NUMBER, SEE TABLE
8	FCI LOGO
9	HOUSING MOLDING CAVITY NUMBER
10	THE CABLE BENDING INNER RADIUS SHOULD BE BIGGER THAN 18mm FOR EACH DIRECTION AND THE DISTANCE FROM TAIL OF CONNECTOR TO ADJACENT PARALLELED CABLE SURFACE SHOULD BE 20mm MIN.
11	THE CABLE CONFIGURATION CAN BE BOTH ABREAST(VERSION 1) AND MIXED(VERSION 2)AND THE BENDING INNER RADIUS SHOULD BE BIGGER THAN 18mm FOR BOTH TYPE

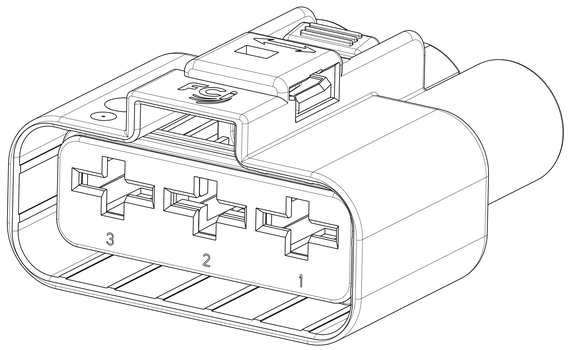

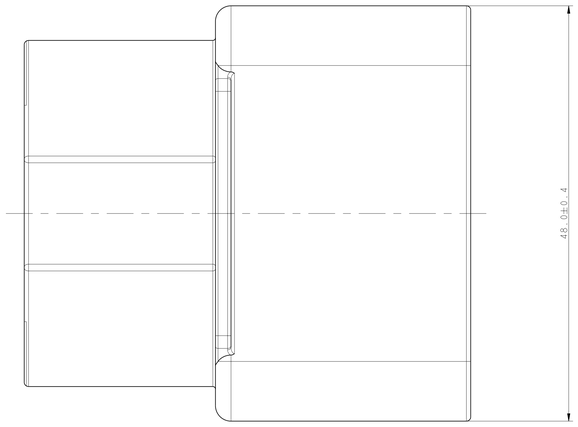

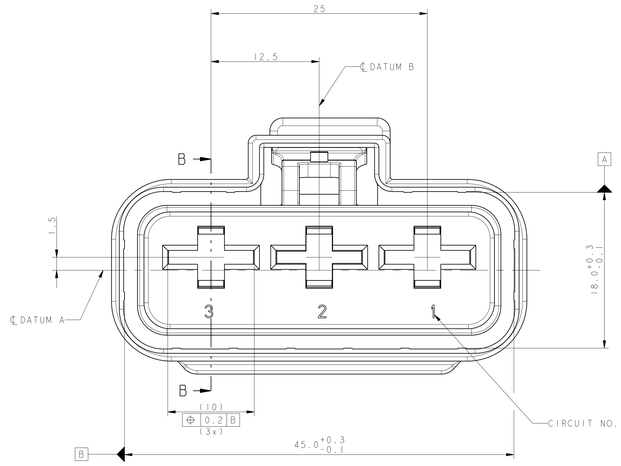

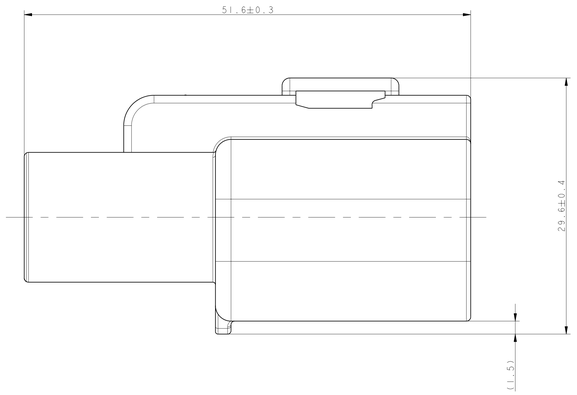

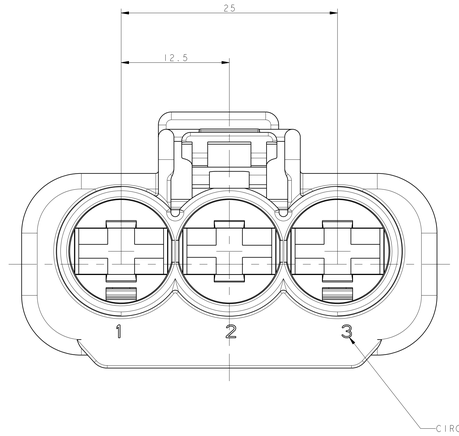

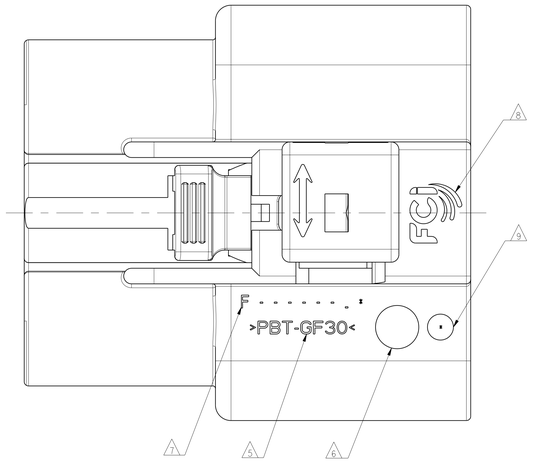

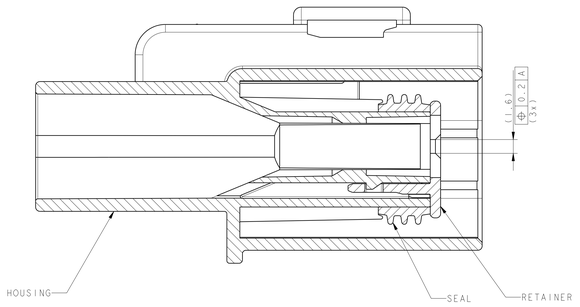

SECTION B-B

3W FEMALE CONNECTOR W/T 9.5mm TML W/O CPA	Sn VERSION	6 007 04 71	>6.00 - 10.00	CONTACT BODY: Cu Cr Si Ti / Sn Rm 470 N/mm2 LOCKING SPRING: X10 Cr Ni 18 8 / BLANK	6 099 33 04	5.4 - 6.6	YELLOW	SILICON	9 084 05 00
		6 007 04 61	>4.00 - 6.00		6 099 33 01	3.5 - 5.5	BLACK	SILICON	
		6 007 04 51	2.50 - 4.00		6 099 33 08	3.4 - 4.4	GREEN	SILICON	
BLIND PLUG FOR 'BOX' 9.5 mm		-	-	-	6099 33 06	-	WHITE	SILICON	
DESCRIPTION		FCI PART-NO.	WIRE CROSS SECTION (mm^2)	MATERIAL/SURFACE	PART-NO.	FOR INSULATION Ø(mm)	COLOR	MATERIAL	CRIMP SPEC
SUITABLE TERMINALS					SUITABLE SINGLE WIRE SEAL				

3W FEMALE CONNECTOR W/T 9.5mm TML,W/O CPA	F000010	A	F099900	1
DESCRIPTION	FCI PART NUMBER	FCI PART REVISION	FCI PART NUMBER FOR COUNTER PART	MATERIAL

CS10-211	-	INITIAL RELEASE	
ECN NO.	ZONE	CHANGE DESCRIPTION	

THIS DRAWING AND ALL OTHER INFORMATION CONTAINED THEREIN IS PROPRIETARY AND THE PROPERTY OF FCI.This drawing may not be copied, reproduced or disclosed to any third party without the expressed written permission of FCI.FCI April ©1999

PRODUCT SPEC.	PACKAGING SPEC.	APPLICATION SPEC.
-	-	-

TOLERANCES: ±0.1 ±2°
CONTRACT N°: -
DO NOT MEASURE DRAWING
MATERIAL: -
SURFACE FINISH: -
COLOUR: BLACK
TOOL NO.: -
ECN Loc. Code: CS

	DATE	NAME
CREATED BY	2012/05/08	Tanty YU
MODIFIED BY	2012/05/08	Tanty YU
CHECKED BY	2012/05/08	Alex Shiba
APPROVED BY	2012/05/08	C.GAUVILLET
FILE NAME	PCC0722657	

TITLE: CUSTOMER DRAWING
3W FEMALE W/T 9.5mm TML, W/O CPA
PROJECT
3W FEMALE CONNECTOR
CSR NO. AP-100319 CAT. NO. -
DOCUMENT UNDER PDS CONTROL NO MODIFICATION ALLOWED OUTSIDE

ISO PROJECTION | CAD SYSTEM: pro / eng.
DIMENSION IN MILLIMETERS | TMC SIZE: A0
APPROVAL LEVEL: -
SHEET: 1 / 2
SCALE: 4:1

DRAWING NUMBER: PCC0722657 REV.: A
STATE: SERIAL RELEASED
PART NUMBER: F000010 REV.: A

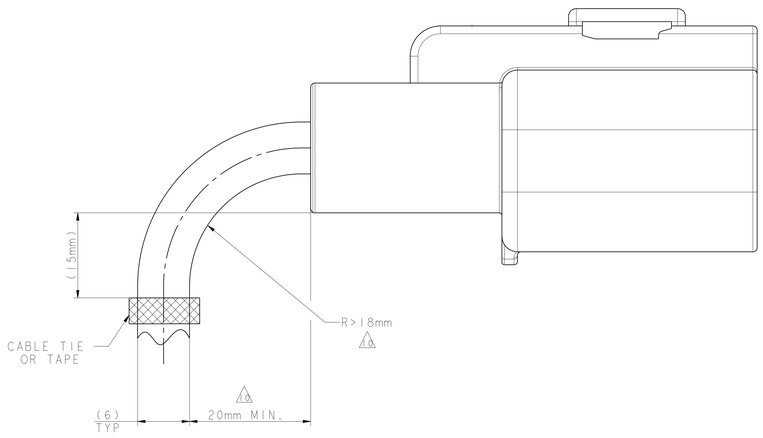

BENDING DOWN

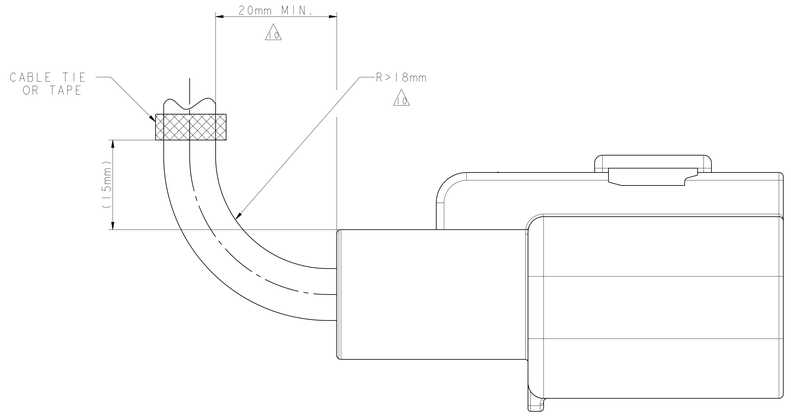

BENDING UP

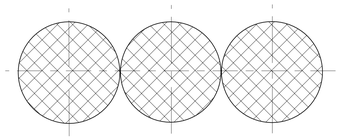

VERSION 1

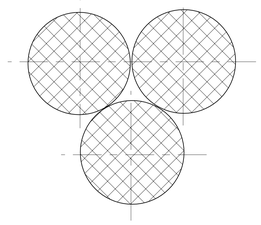

VERSION 2

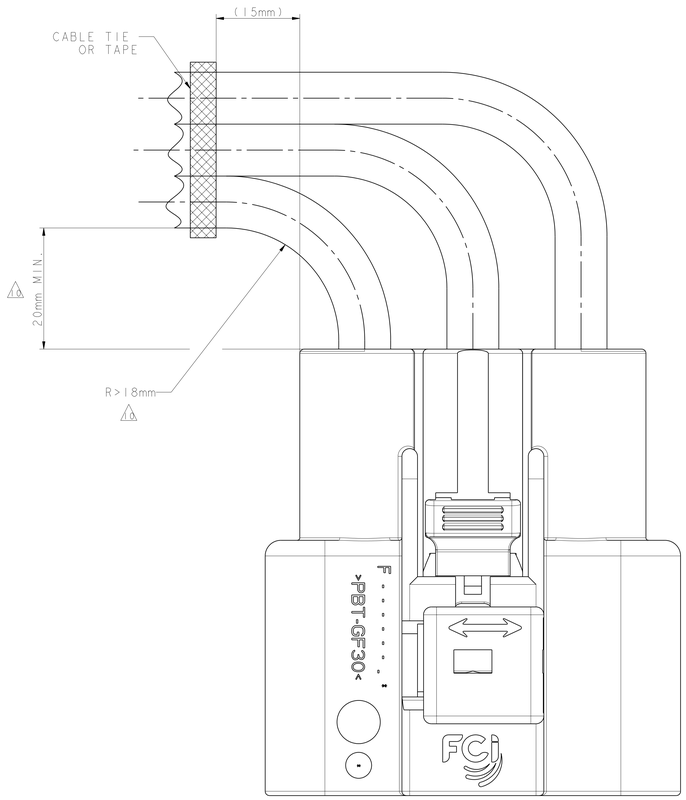

BENDING LEFT

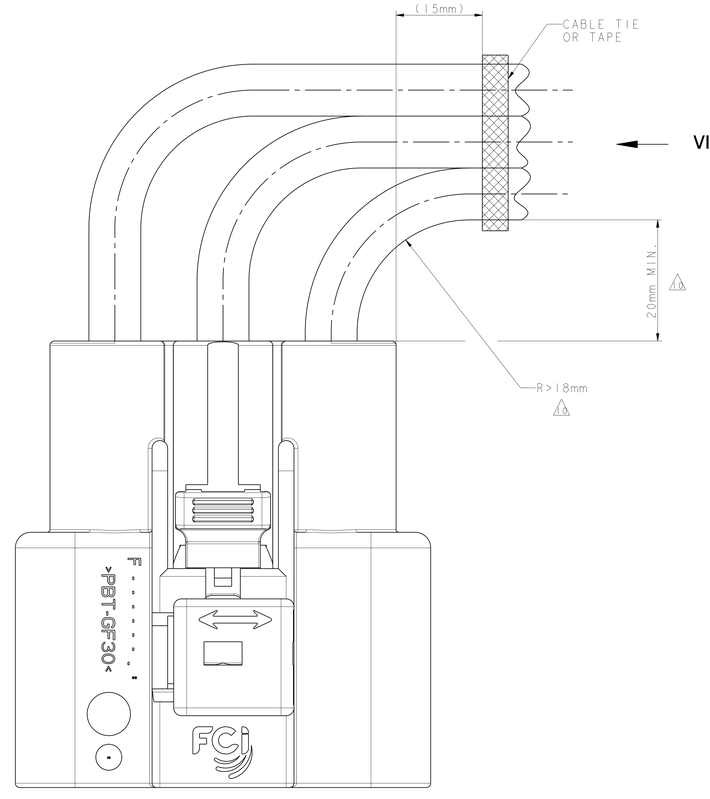

BENDING RIGHT

VIEW A

RECOMMENDED CABLE BENDING DIRECTION AND DIMENSIONS

CS10-211	-	INITIAL RELEASE
ECN NO.	ZONE	CHANGE DESCRIPTION

THIS DRAWING AND ALL OTHER INFORMATION CONTAINED THEREIN IS PROPRIETARY AND THE PROPERTY OF FCI. This drawing may not be copied, reproduced or disclosed to any third party without the expressed written permission of FCI. FCI April©1999

PRODUCT SPEC. -	PACKAGING SPEC. -	APPLICATION SPEC. -	
TOLERANCES ±0.1 ±2°	MATERIAL : -	SURFACE FINISH -	CAD SYSTEM pro / eng.
CONTRIBUT N. -	COLOUR : -		DIMENSION IN MILLIMETERS
DO NOT MEASURE DRAWING	TOOL NO. -	ECO Loc. Code CS	DWG SIZE A0

	DATE	NAME		
CREATED BY	2015/05/08	Tony Yu	TITLE CUSTOMER DRAWING 3W FEMALE W/T 9.5mm TML, W/O CPA	DRAWING NUMBER PCC0722657 REV. A
MODIFIED BY	2015/05/08	Tony Yu	PROJECT 3W FEMALE CONNECTOR	STATE SERIAL RELEASED
CHECKED BY	2015/05/08	Alex Gaitán		PART NUMBER F000010 REV. A
APPROVED BY	2015/05/08	C GOURPLEY	ESR NO. AP-100319 CAT. NO. -	APPROVAL LEVEL -
FILE NAME PCC0722657			DOCUMENT UNDER PDS CONTROL NO MODIFICATION ALLOWED OUTSIDE	SHEET 2 of 2 SCALE 4:1