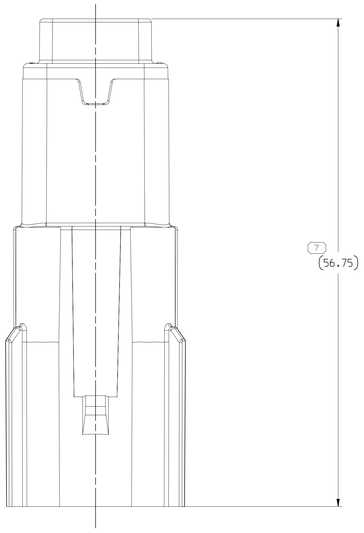

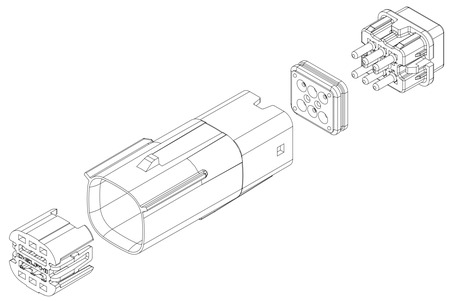

EXPLODED VIEW
SCALE 2:1

SYMBOL DEFINITION

A DIMENSION WITHOUT AN INSPECTION REPORT SYMBOL (OVAL) DOES NOT REQUIRE INSPECTION. IT MAY BE CONTROLLED ON THE INDIVIDUAL COMPONENT DRAWING.	TOTAL NO OF INSPECTIONS REQUIRED	30
	LAST NO. USED	23

MISSING SYMBOLS

NO MISSING SYMBOL NUMBER

DWG STATUS					ZONE	REVISION HISTORY	AUTH	DR	APVD 1	APVD 2
DATE	STG	REV	N/P	CHG						
25JA18	R	01	-	-		ALL PARTS - RELEASED	438745	AHG	AHG	ACV
21MY19	R	02	-	-		ALL PARTS - ADDED "OPEN CAVITY VERSIONS" AND "ASSEMBLIES WITH 11 MM CLIP SLOT" NOTES	443313	JGO	ACV	ACV
29MR21	R	03	-	-		35550103 - RELEASED	553846	JLL	GLG	SV
23AP21	R	04	-	-		35550103 - UPDATED PART AVAILABILITY (PN WAS NOT AVAILABLE)	554137	JAA	JAA	ACR
12MY21	R	05	-	-		35563709 - RELEASED	554279	GDH	JAA	JVP

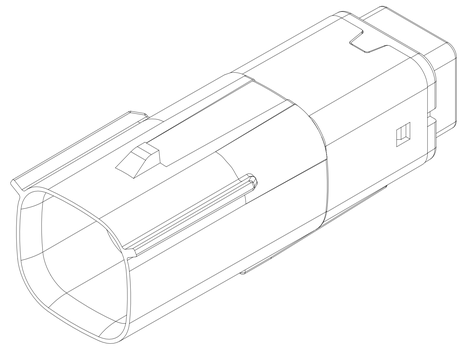

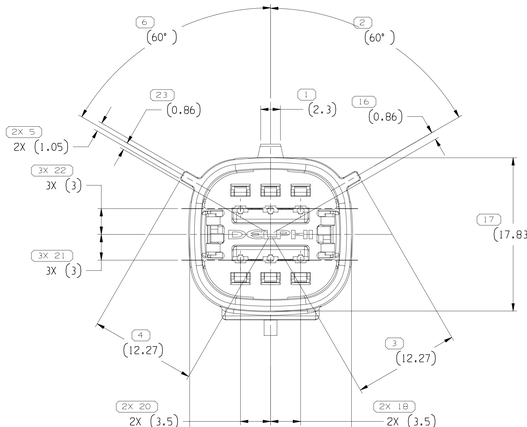

TYPE 201

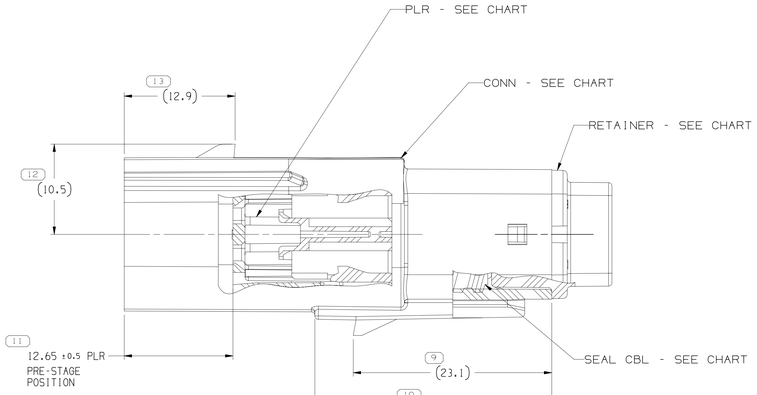

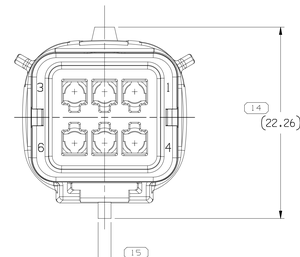

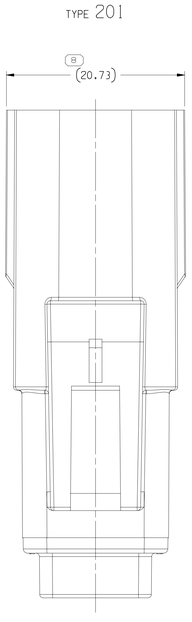

NOTES

1. UNLESS OTHERWISE SPECIFIED AND/OR INDICATED:

   DIMENSIONS ARE TO FACE OF VIEW SHOWN AND AUTOMATICALLY ROUNDED BY COMPUTER FOR INSPECTION (SEE MATH MODEL FOR PRECISE DIMENSIONS). FOR ALL OTHER DIMENSIONS NOT SHOWN BUT REQUIRED FOR TOOL BUILD, SEE MATH MODEL FOR PRECISE TOOL PATH DATA.

2. THIS PRODUCT IS NOT CATEGORIZED AS AN APPEARANCE ITEM, MINOR IMPERFECTIONS INCLUDING, BUT NOT LIMITED TO, FLOW MARKS, COLOR BLEMISHES, GATE VESTIGE, AND SOFT FLASH THAT DO NOT AFFECT THE FIT, FORM, OR FUNCTION OF THE PART ARE PERMISSIBLE PER EANP_4-3_CS_01_EN.

4. FOR APPLICATION DATA SEE THE INDIVIDUAL APPLICATION DRAWINGS.

5. FOR ALL OPEN CAVITY VERSIONS SEE SHEET 1.

6. FOR ASSEMBLIES WITH 11 MM CLIP SLOT SEE DRAWING 35117263.

(OVAL)	PART NO	REV	N/P	TYPE	CONNECTOR	PLR	RETAINER	SEAL CBL	USCAR OPTION	PLUGGED 1	BLOCKED CIRCUITS POSITION 2	3	4	5	6	BLOCKED CAVITIES
	35563709	01	-	201	15513462	15513496	35563708	15513495	A	-	X	X	X	X	-	4
	35550103	01	AA	201	15513462	15513496	35481348	15513495	A	-	-	X	-	-	X	2
	35171405	01	AA	201	15513462	15513496	15513482	15513495	A	X	X	X	X	X	X	6

A LINE DRAWN THROUGH A PART NUMBER INDICATES THAT PHYSICAL PARTS ARE NOT AVAILABLE FOR ORDERING.

PART NUMBERS THAT DO NOT HAVE A LINE PRESENT INDICATE THAT PHYSICAL PARTS ARE AVAILABLE FOR ORDERING.

CONTACT APTIV SALES TO ASSURE AVAILABILITY OF PARTS.

DWG TYPE: PART DRAWING

STYLE

VOLUME (CM³)

DISTR CODE

UNLESS OTHERWISE SPECIFIED

THIS DOCUMENT IS IN ACCORDANCE WITH ASME Y14.5M-1994 AS AMENDED BY THE ISM GLOBAL DIMENSIONING AND TOLERANCING ADDENDUM-2001. SEPARATE PATTERNS OF FEATURES MAY BE DATED SEPARATELY REGARDLESS OF DATUM REFERENCES.

ALL DIMENSIONS ARE IN MILLIMETERS

(N/A) PROCESS SENSITIVE DIMENSION

DIMENSIONS ENCLOSED IN ( ) INDICATE REFERENCE DIMENSIONS AND NO TOLERANCE LIMITS ARE ESTABLISHED

REFERENCE

DIMENSIONAL RANGE (MM)								CHART E1
FROM TO	> 0 20	> 20 30	> 30 70	> 70 100	> 100 150	> 150 200	> 200 250	> 250 300	> 300 400
TOLERANCE UNLESS OTHERWISE SPECIFIED	±0.15	±0.2	±0.3	±0.4	±0.5	±0.6	±0.8	±1	±1.2
ANGULAR TOLERANCE ±2°									

THIRD ANGLE PROJECTION

DO NOT SCALE

USE MATH DATA

NX

•APTIV•

CONNECTION SYSTEMS
WARREN, OH

COPYRIGHT 2018 APTIV, ALL RIGHTS RESERVED.

THIS DRAWING IS THE PROPERTY OF APTIV AND CONTAINS APTIV CONFIDENTIAL INFORMATION. THE REPRODUCTION, DISTRIBUTION AND UTILIZATION OF THIS DOCUMENT OR ITS RELATED CAD MATH DATA, AS WELL AS COMMUNICATION OF ANY CONTENT TO OTHERS, WITHOUT EXPRESS AUTHORIZATION, IS PROHIBITED.

	DATE
DR	
APVD1 ARMANDO HERNANDEZ	25JA18
APVD2 ARMANDO HERNANDEZ	25JA18
APVD3 ARTURO CASARES	25JA18
APVD4	
APVD5	

SUBSTANCES OF CONCERN AND RECYCLED CONTENT PER APTIV 10949001

MATERIAL: SEE CHART

DRAWING NAME: TAXI ASM CONN 6 M OCS 1.5 SLD

DRAWING NUMBER: 15513480

SIZE	SCALE	FRAME NO	SHEET NO	STG	REV	N/P
A0	4:1	1 OF 2	2 OF	R	05	-

Uncontrolled if printed
Doc: 15513480_C1201_SCD.pdf
Printed: 18-May-21 Time: 14:58:33