ON-BOARD DIAGNOSTIC (OBD) SERIES

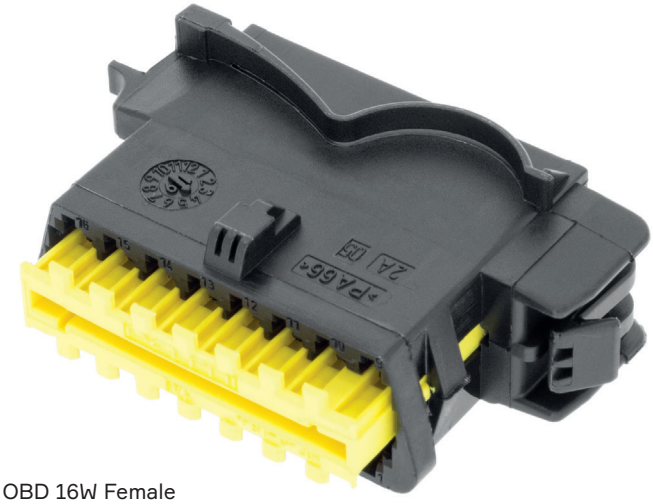

OBD 16W Female

BENEFITS

- Optional protection cap cover with hinge against liquid splashes
- Pass-through panel mount inside cockpit
- Easiness of wiring and small shape housing

FEATURES

- Unsealed housing for SICMA clean body terminal with lock reinforcement (TPA)
- Standard “On-Board Diagnostic (OBD)” receptacle with 16 Ways

AVAILABLE CONFIGURATIONS

Cavity Count (ways)	16
Cavity Configurations (mm)	1.5
Genders	Female
Sealing Type	Unsealed
Centerline Spacing (mm)	4.0
Terminal Position Assurance (TPA) Type	Primary Lock Reinforcement (PLR)

APPLICATIONS

Cockpit

TEMPERATURE

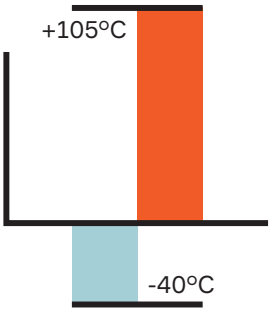

VIBRATION



See back page for representative part numbers and packaging dimensions.

About Aptiv

Aptiv is a global technology company that develops safer, greener and more connected solutions enabling the future of mobility. Headquartered in Dublin, Aptiv has approximately 150,000 employees and operates 14 technical centers, as well as manufacturing sites and customer support centers in 45 countries.

Visit **aptiv.com**



 | © 2019 Aptiv. All rights reserved

APTIV

Cavity count	Blade size (mm)	Gender	Dimensions W x H x D (mm)	Part number	Index	Color
16	1.5	F	108.8 x 22.1 x 31.85	13800155	with cap	Gray
16	1.5	F	49.3 x 19.6 x 31.85	13800154	without cap	Black

DIMENSION MEASUREMENT SAMPLE

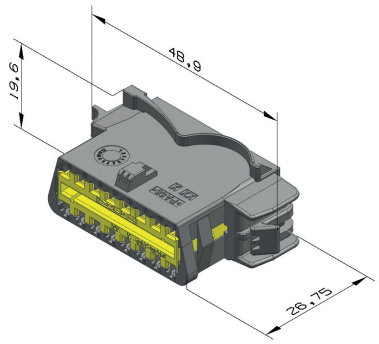

13800154

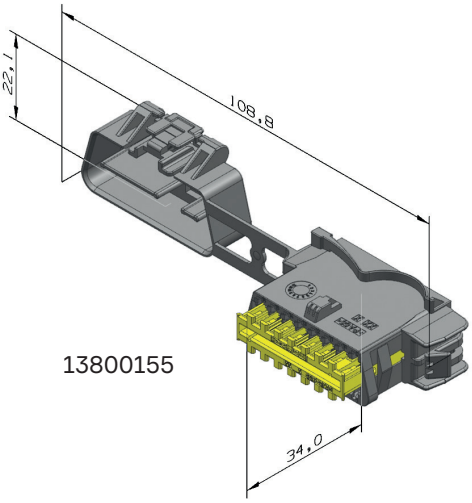

13800155

The dimensions are in mm.

EXPLODED VIEW

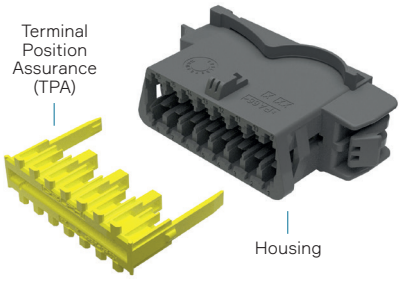

13800154

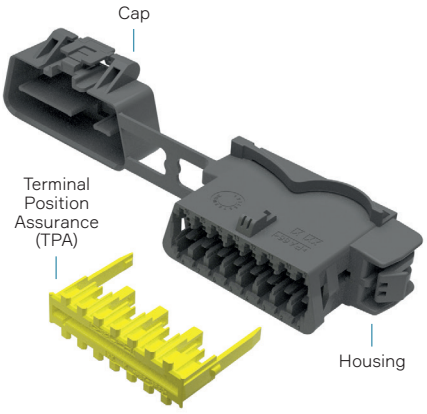

13800155

COMPATIBLE WITH

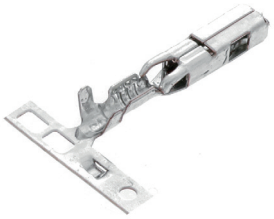

SICMA 1.5 Series Female Terminal

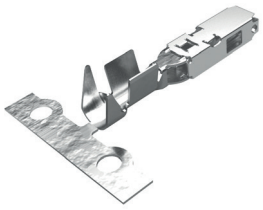

BTS 1.5 Series Female Terminal

Part numbers, specifications, dimensions and performance data in this document are for general references only and are subject to change without notice. To verify product information, please contact an Aptiv representative.

APTIV

aptiv.com | © 2019 Aptiv. All rights reserved