DRAWING NUMBER / NUMERO DISEGNO	FSD 309914	REVISION / REVISIONE	B	SHEET / FOGLIO	1/1	APPROVAL LEVEL / LIV. DI APPROVAZIONE	-
DRAWING / DISEGNO	C						

STRICTLY CONFIDENTIAL

ASSEMBLY FEMALE	
HOUSING	material PBT
GASKET	material LSR - colour RED
MECHANICAL POLARIZATION (polarizzazione meccanica)	BLACK COLOUR (colore nero) 8 way 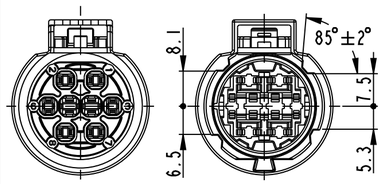 SCALE 1:1
P/N	17260805

ASSEMBLY FEMALE	
HOUSING	material PBT
GASKET	material LSR - colour RED
MECHANICAL POLARIZATION (polarizzazione meccanica)	GREY COLOUR (colore grigio) 6 way 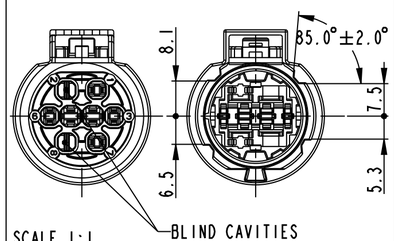 SCALE 1:1
P/N	33400383

ASSEMBLY FEMALE	
HOUSING	material PBT
GASKET	material LSR - colour RED
MECHANICAL POLARIZATION (polarizzazione meccanica)	BROWN COLOUR (colore marrone) 5 way 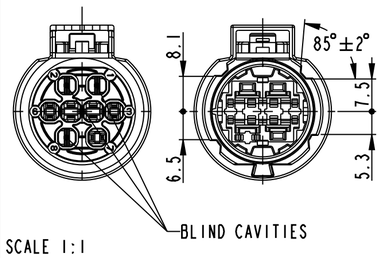 SCALE 1:1
P/N	17260815

ASSEMBLY FEMALE	
HOUSING	material PBT
GASKET	material LSR - colour RED
MECHANICAL POLARIZATION (polarizzazione meccanica)	GREEN COLOUR (colore verde) 4 way 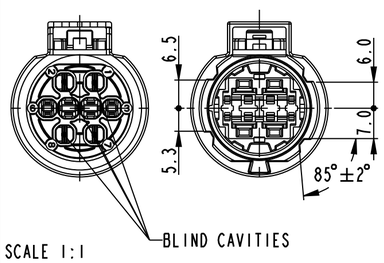 SCALE 1:1
P/N	17260855

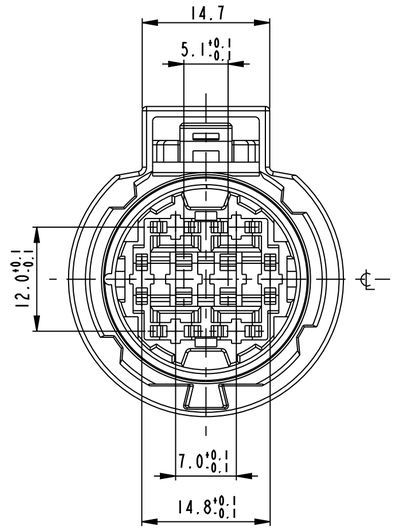

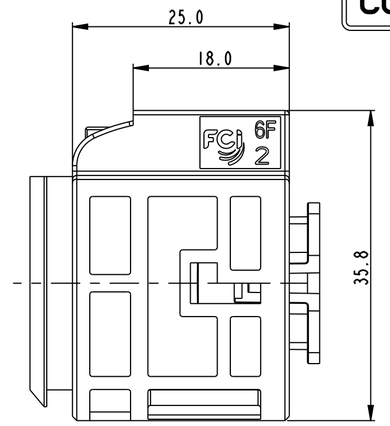

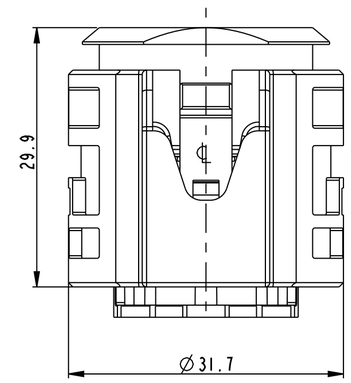

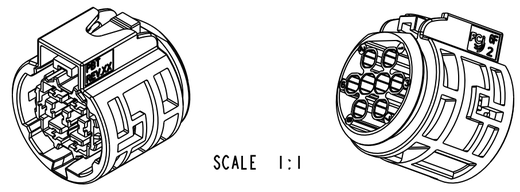

SCALE 1:1

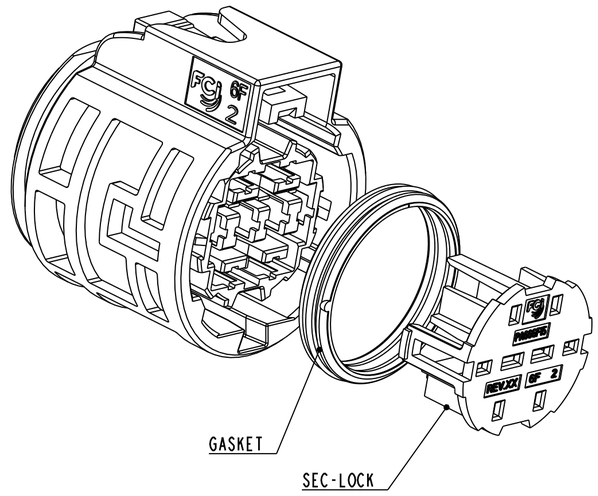

THE SEC-LOCK IS SUPPLIED SEPARATELY
IL SEC-LOCK VIENE FORNITO SEPARATAMENTE

CAVITY SUITABLE FOR TERMINAL	WIRE SIZE (mm2)	P/N SWS COLOUR	P/N CAVITY PLUG COLUOR
SICMA3 FEMALE 1.5 (T3) P/N 21ICC2S0161	0.22	21IM0007 YELLOW	21IM0012 WHITE
SICMA3 FEMALE 1.5 (T3) P/N 21ICC2S1161	0.35 - 0.75		
SICMA3 FEMALE 1.5 (T3) P/N 21ICC2S4161	1.0	21IM0008 GREEN	
SICMA3 FEMALE 1.5 (T3) P/N 21ICC2S2161	1.5		
SICMA2 FEMALE 2.8 (T3) P/N 17062000	0.35 - 0.75	21IM0009 RED	21IM0013 WHITE
SICMA2 FEMALE 2.8 (T3) P/N 17062010	1.0 - 2.5	21IM0010 BLUE	

SECONDARY LOCK FEMALE	
MATERIAL (materiale)	PA66-GF15%
COLOUR (colore)	VIOLET COLOUR (colore viola)
P/N	17260879

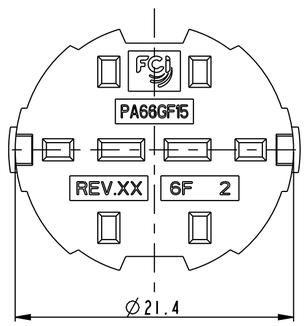

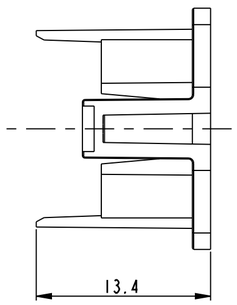

ECN-NO. / NUMERO ECN	DATE DD/MM/YY / DATA	REVISION / REVISIONE	POSITION / POSIZIONE	CHANGE DESCRIPTION / DESCRIZIONE MODIFICA	DRAWN BY / DISEGNATORE	CHK. BY / CONTROLLATO	APPR. BY / APPROVATO
12-00454	14/12/12	B		P/N 21ICC2S1161 suitable to 0.35 section; P/N 21ICC2S0161 suitable to 0.22 section	DT		MC
12-00551	12/12/12	A		NEW P/N ISSUE - CODE GREY	DT		MC
01-09	02/02/2009	02-R		RELEASED FOR PRODUCTION Mould revision net necessary	GB	FG	MC
92/06	12/12/06	02	-	UPDATED MODEL DRAWING AND NOTES	FP		MC
-	23/06/06	01	-	UPDATED MODEL DRAWING AND NOTES	FP		MC

PRODUCT SPEC. / SPEC. DI PRODOTTO	PACKAGING SPEC. / SPEC. DI IMBALLAGGIO	APPLICATION SPEC. / SPEC. DI APPLICAZIONE
IPS 310	-	IPS 311

COPYRIGHT
THIS DRAWING IS THE PROPERTY OF DELPHI CORPORATION. THE REPRODUCTION, DISTRIBUTION AND UTILIZATION OF THIS DOCUMENT OR ITS RELATED CAD MATH DATA, AS WELL AS COMMUNICATION OF ANY CONTENT TO OTHERS, WITHOUT EXPRESS AUTHORIZATION IS PROHIBITED.

DELPHI CORPORATION AND/OR ITS AFFILIATES. ALL RIGHTS RESERVED. REVISED
QUESTO DISEGNO E' PROPRIETA' DI DELPHI CORPORATION E CONTIENE INFORMAZIONI CONFIDENZIALI. LA RIPRODUZIONE, DISTRIBUZIONE E UTILIZZAZIONE DI QUESTO DOCUMENTO O DELLE SUE RELATIVE MATEMATICHE CAD, NONCHE LA COMUNICAZIONE DI QUALSIASI CONTENUTO AD ALTRI, SENZA ESPLICITA AUTORIZZAZIONE, E' PROIBITA

TOLERANCES / TOLLERANZE	MATERIAL / MATERIALE	SURFACE FINISH / FINITURA SUPERFICIALE	CAD SYSTEM
±0.3mm / ±1°	SEE TABLE	-	pro / eng.
COUNTERPART Nr. / CONTROPARTE Nr.	COLOUR / COLORE		
1 726 08 X1	SEE TABLE		
DO NOT SCALE DRAWING / DISEGNO FUORI SCALA	TOOL NO.	LOC. CODE / NAZIONALITA'	DIMENSION IN MILLIMETERS / DIMENSIONI IN MILLIMETRI
	-	IT	ISO PROJECTION / PROIEZIONE ISO

DELPHI
DELPHI PACKARD ELECTRICAL/ELECTRONIC ARCHITECTURE
TORINO, ITALY

	DATE / DATA	NAME / NOME
DRAWN BY / DISEGNATORE	12/04/06	G.STELLA
CHECKED BY / CONTROLLATO		
APPROVED BY / APPROVATO	12/04/06	M.COLOMBO

TITLE / DESCRIZIONE
ASSEMBLY FEMALE
8 WAY SEALED CONNECTOR

DRAWING NUMBER / NUMERO DISEGNO: FSD 309914

ESR NO. / NUMERO ESR: EU-060274
CAT. NO. / NUMERO CAT.: SEE TABLE
FILE NAME / NOME FILE: fsd309914

DWG SIZE / FORMATO: A2
SHEET / FOGLIO: 1 of / di 1
SCALE / SCALA: 2:1