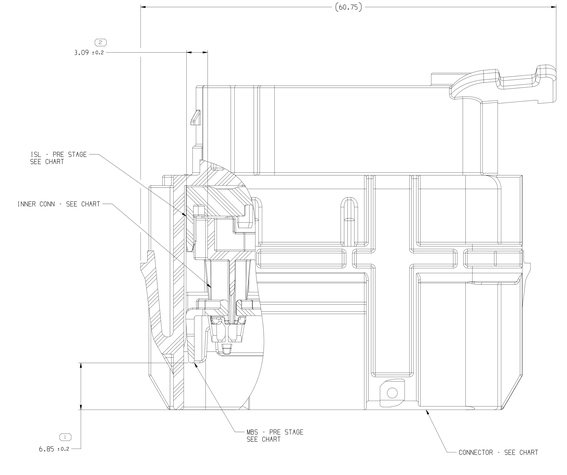

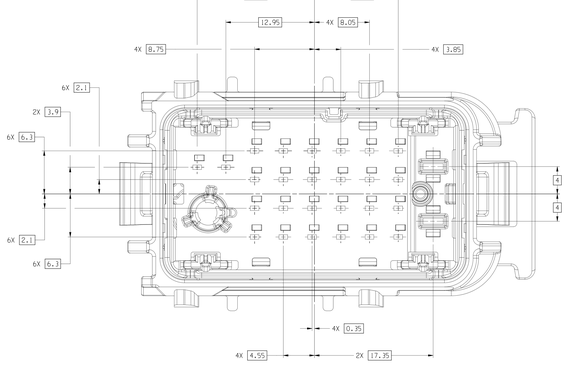

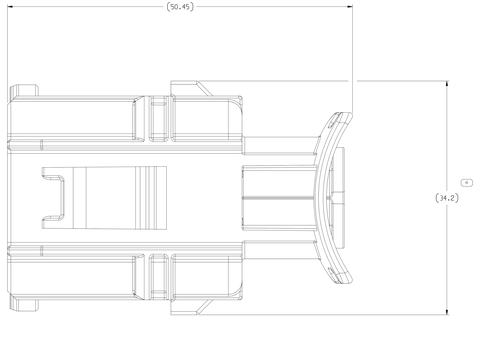

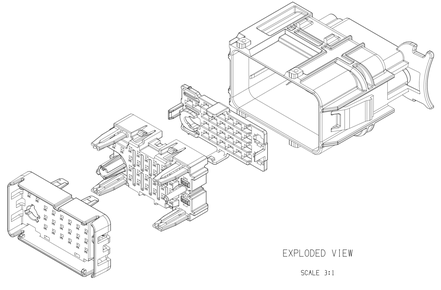

EXPLODED VIEW

SCALE 3:1

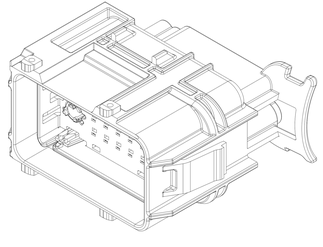

SYMBOL DEFINITION		
A DIMENSION WITHOUT AN INSPECTION REPORT SYMBOL DOES NOT REQUIRE INSPECTION. IT MAY BE CONTROLLED ON THE INDIVIDUAL COMPONENT DRAWING.	TOTAL NO OF INSPECTIONS REQUIRED	5
	LAST NO. USED	5

MISSING SYMBOLS

NO MISSING SYMBOL NUMBER

DWG STATUS					ZONE	REVISION HISTORY	AUTH	DR	APVD	APVD
DATE	SUB	REV	N/P	CHG					1	2
19FE20	R	01	-	-	-	WAS PE449138 AND RELEASED PART DRAWING	550723	AN	RAK	DJS
26FE20	R	01	AA	-	-	ADDED CHART AND REVISED NOTE #4	551109	AN	SNS	DJS
30JAN21	R	01	AB	-	-	PROCESS SENSITIVE DIMENSION WAS DIM #2	554669	AN	RAK	DJS
12APR22	R	01	AC	-	-	UPDATED PART AVAILABILITY	557140	HM	RAK	DJS

NOTES:

1. UNLESS OTHERWISE SPECIFIED AND/OR INDICATED:

   DIMENSIONS ARE TO FACE OF VIEW SHOWN AND AUTOMATICALLY ROUNDED BY COMPUTER FOR INSPECTION (SEE MATH MODEL FOR PRECISE DIMENSIONS). FOR ALL OTHER DIMENSIONS NOT SHOWN BUT REQUIRED FOR TOOL BUILD, SEE MATH MODEL FOR PRECISE TOOL PATH DATA.

2. THIS PRODUCT IS NOT CATEGORIZED AS AN APPEARANCE ITEM. MINOR IMPERFECTIONS INCLUDING, BUT NOT LIMITED TO, FLOW MARKS, COLOR BLEMISHES, GATE VESTIGE, AND SOFT FLASH THAT DO NOT AFFECT THE FIT, FORM, OR FUNCTION OF THE PART ARE PERMISSIBLE PER EAMP_4-3_CS_01_EN.

3. PART IS MANUFACTURED TO GEOMETRIC TOLERANCES. CENTERLINE DIMENSIONS ARE FOR REFERENCE ONLY.

4. FOR APPLICATION DATA SEE THE APPLICATION DRAWING - TBD

35383764	01	AC	35398129	35398133	35398138	35398130
PART NO	REV	N/P	CONNECTOR	INNER CONN	MBS	ISL

DRAWING NUMBER							
35383764							
SIZE	SCALE	FRAME NO	SHEET NO	SHEET TOT	SIZE	REV	N/P
A1x3	3:1	2 OF 1	1 OF 1	R	01	AC	

△ 1 LINE DRAWN THROUGH A PART NUMBER INDICATES THAT PHYSICAL PARTS ARE NOT AVAILABLE FOR ORDERING.

PART NUMBERS THAT DO NOT HAVE A LINE PRESENT INDICATE PHYSICAL PARTS ARE AVAILABLE FOR ORDERING.

CONTACT APTIV SALES TO ASSURE AVAILABILITY OF PARTS.

DWG TYPE	PART DRAWING
STYLE	
VOLUME (CM³)	SYSTEM UNIT

UNLESS OTHERWISE SPECIFIED

THIS DOCUMENT IS IN ACCORDANCE WITH ASME Y14.5M-1994 AND ISO 10579:1993 GEOMETRICAL PRODUCT SPECIFICATIONS (GPS) - GENERAL TOLERANCING - NON-RIGID PARTS

ALL DIMENSIONS ARE IN MILLIMETERS

(2) PROCESS SENSITIVE DIMENSION

DIMENSIONS ENCLOSED IN ( ) INDICATE REFERENCE DIMENSIONS AND NO TOLERANCE IS TO BE ESTABLISHED.

DIMENSIONAL RANGE (MM)									
FROM	0	>6	>30	>120	>315	>100	>200	>250	>400
TO	6	30	120	315	1000	200	250	400	800
TOLERANCE (UNLESS OTHERWISE SPECIFIED)									
±0.25	±0.25	±0.5	±0.8	±1.2	±2	±3	±4.5	±7	±9
ANGULAR TOLERANCE ±0°									

REFERENCE

THIRD ANGLE PROJECTION

DO NOT SCALE

USE MATH DATA

NX

•APTIV•

CONNECTION SYSTEMS

Chennai, India

COPYRIGHT 2020 APTIV. ALL RIGHTS RESERVED.

THIS DRAWING IS THE PROPERTY OF APTIV AND CONTAINS APTIV CONFIDENTIAL INFORMATION. THE INFORMATION CONTAINED HEREIN MAY NOT BE UTILIZED OR DISCLOSED WITHOUT PRIOR WRITTEN CONSENT. UTILIZATION OF THIS DOCUMENT OR ITS RELATED CAD MATH DATA, AS WELL AS COMMUNICATION OF ANY CONTENT TO CONTROL, WITHOUT EXPRESS AUTHORIZATION, IS PROHIBITED.

		DATE
DR		
APVD1	A.NAILI-USAMF	19FE20
APVD2	ABHAYA K.KISHORE	19FE20
APVD3	DALE J.SMUTNY	19FE20
APVD4		
APVD5		
SUBSTANCES OF CONCERN AND RECYCLED CONTENT(APVD5) IS/ARE(S)		
MATERIAL	NA	
DRAWING NAME	ASM CONN 29 M CTS 120 280 MINI COAX SLD	
DRAWING NUMBER	35383764	
SIZE	SCALE	SHEET NO	SHEET TOT	SIZE	REV	N/P
A1x3	3:1	1 OF 1	1 OF 1	R	01	AC

35383764

PART NO 35383764 | REV 01 | N/P AC | DATE 19Mar2021 | DRAWN BY Abhaya Kishore | CHECKED BY Dale Smutny | APPROVED BY Dale Smutny | DATE 19Mar2021