

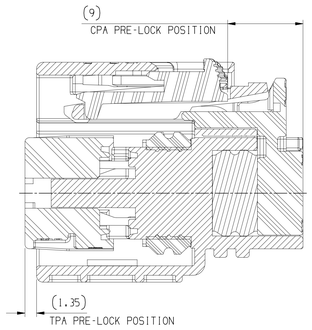

SECTION B-B

CPA & TPA IN PRE-LOCK POSITION

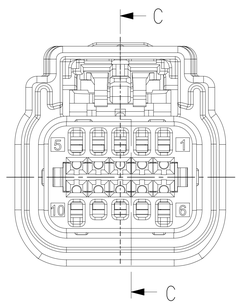

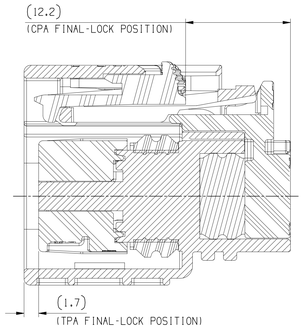

SECTION C-C

CPA & TPA IN FINAL-LOCK POSITION

SYMBOL DEFINITION		
A DIMENSION WITHOUT AN INSPECTION REPORT SYMBOL (8) DOES NOT REQUIRE INSPECTION. IT MAY BE CONTROLLED ON THE INDIVIDUAL COMPONENT DRAWING.	TOTAL NO OF INSPECTIONS REQUIRED	8
	LAST NO. USED	7

MISSING SYMBOLS
NO MISSING SYMBOL NUMBER

DWG STATUS					ZONE	REVISION HISTORY	AUTH	DR	APVD 1	APVD 2
DATE	STG	REV	N/P	CHG						
26JN19	R	01	-	-		SERIAL RELEASE	443792	SSH	SJW	PJH

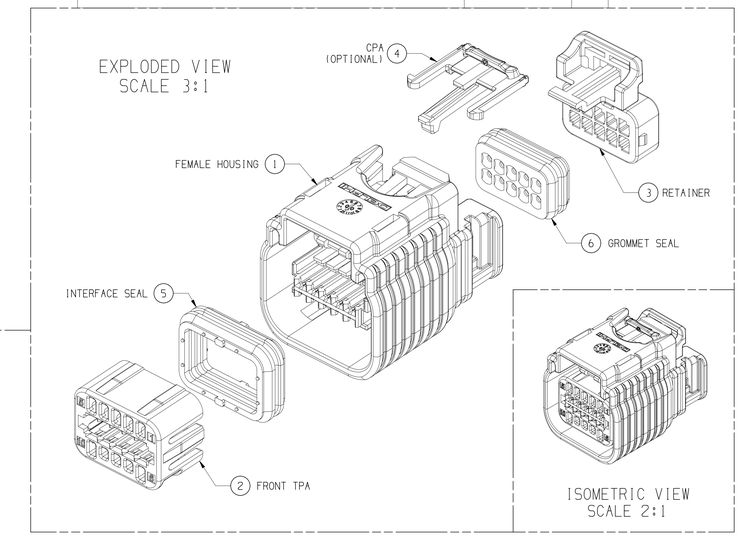

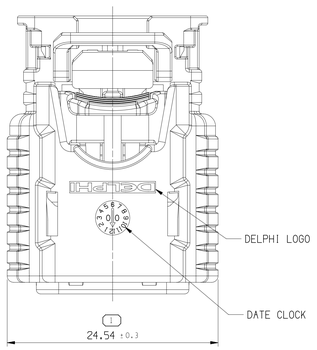

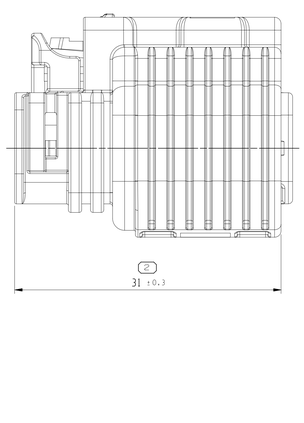

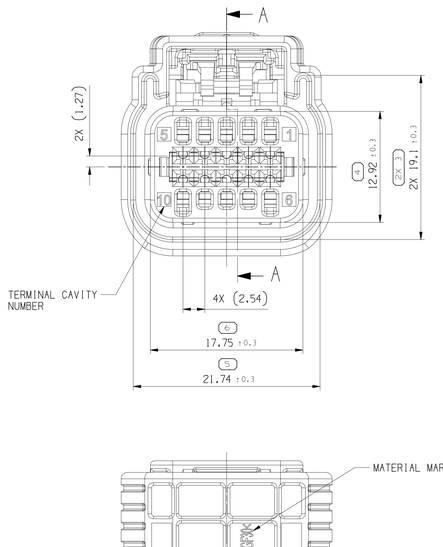

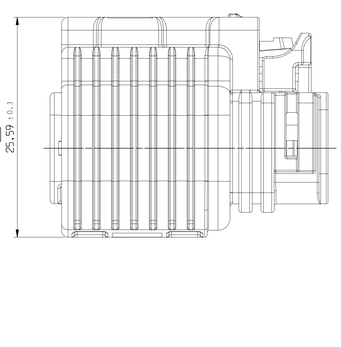

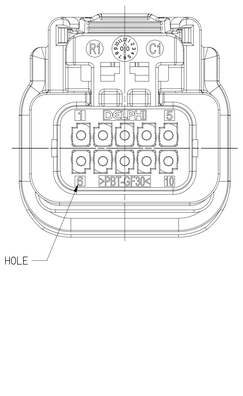

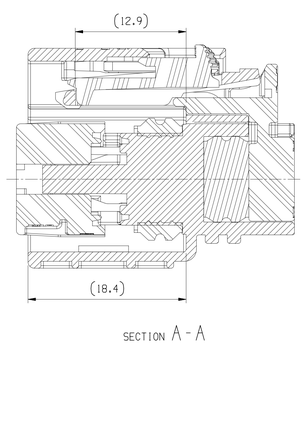

SECTION A-A

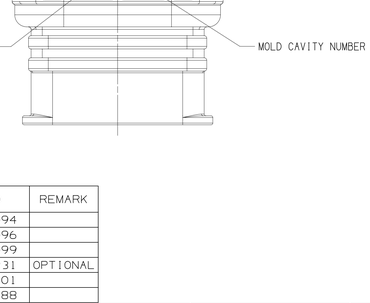

NOTES:

1. TOLERANCE ON DIN ISO 2768 (m)
2. MUST BE FREE OF CRACK, FLOW MARK, FLASH, BURR ETC, THAT AFFECT FUNCTION OF PRODUCT
3. MUST MEET HMC SPEC ES91500-00 UNLESS OTHERWISE SPECIFIED TO VENDOR SPECIFICATION
4. APPLICABLE MALE INTERFACE DRAWING NO : 15438865 (USCAR-EWCAP 064-S-010-2-Z01)

ASSOCIATED PARTS				
FEMALE TERMINAL		PART NUMBER	WIRE SIZE(mm²)	WIRE OVERALL DIAMETER
OCS 1.2	Sn PLATING	35072403	0.3-0.5	1.2-1.6
CAVITY PLUG		15404841	-	-

ASSEMBLY P/NO	REV.	REP.	DESCRIPTION	MATERIAL	COLOR	P/NO	REMARK
35269093	01	1	FEMALE HOUSING	PBT-GF30	BLACK	35269094	
		2	FRONT TPA	PBT-GF30	DARK GRAY	35269096	
		3	RETAINER	PBT-GF30	BLACK	35269099	
		4	CPA	PA66-GF35	DARK GRAY	35128931	OPTIONAL
		5	INTERFACE SEAL	SILICONE RUBBER	YELLOW	35269101	
		6	GROMMET SEAL	SILICONE RUBBER	GREEN	13510388	

DIN ISO 2768	Tolerance Class medium (m)						
Linear Dimensions except for broken edges	Permissible deviations for basic size range (mm)						
	0.5 *) up to 3	over 3 up to 6	over 6 up to 30	over 30 up to 120	over 120 up to 400	over 400 up to 1000	over 1000 up to 2000
	±0.1	±0.1	±0.2	±0.3	±0.5	±0.8	±1.2
Broken edges (radii, chamfers)	Permissible deviations for basic size range (mm)						
	0.5 *) up to 3		over 3 up to 6		over 6		
	±0.2		±0.5		±1		
	Permissible deviations for ranges of lengths, in mm, of the shorter side of the angle concerned						
Angular dimensions	up to 10	over 10 up to 50	over 50 up to 120		over 120 up to 400		over 400
	±1°	±0° 30'	±0° 20'		±0° 10'		±0° 5'

*) For nominal sizes below 0.5mm, the deviations shall be indicated adjacent to the relevant nominal size(s).

DIMENSIONAL RANGE (MM) CHART ET									
FROM	> 0	> 20	> 30	> 70	> 100	> 150	> 200	> 250	> 300
TO	20	30	70	100	150	200	250	300	400
TOLERANCE UNLESS OTHERWISE SPECIFIED									
±0.15	±0.2	±0.3	±0.4	±0.5	±0.6	±0.8	±1	±1.2	
ANGULAR TOLERANCE ±2°									

DIM TO CHECK
DIM FOR HELP
THEORETIC DIM

A LINE DRAWN THROUGH A PART NUMBER INDICATES THAT PHYSICAL PARTS ARE NOT AVAILABLE FOR ORDERING.

PART NUMBERS THAT DO NOT HAVE A LINE PRESENT INDICATE THAT PHYSICAL PARTS ARE AVAILABLE FOR ORDERING.

CONTACT APTIV SALES TO ASSURE AVAILABILITY OF PARTS.

R 0.1 MAX
R 0.2 MAX
SHARP CORNER TOLERANCE

CAD TYP: PART DRAWING
WEIGHT (GR)
VOLUME (CM³)
ROUTING
DISTR CODE: D
UNLESS OTHERWISE SPECIFIED
GENERAL TOLERANCES ACCORDING TO: SEE CHART
GD&T ACCORDING TO: ASME Y14.5M-1994
REFERENCE
THIRD ANGLE PROJECTION
DO NOT SCALE
USE MATH DATA

•APTIV•
CONNECTION SYSTEMS
Chennai, India
COPYRIGHT 2019 APTIV. ALL RIGHTS RESERVED.
THIS DRAWING IS THE PROPERTY OF APTIV AND CONTAINS APTIV CONFIDENTIAL INFORMATION. THE REPRODUCTION, DISTRIBUTION AND UTILIZATION OF THIS DOCUMENT OR ITS RELATED CAD MATH DATA, AS WELL AS COMMUNICATION OF ANY CONTENT TO OTHERS, WITHOUT EXPRESS AUTHORIZATION, IS PROHIBITED.

	DATE
DR SONG, SEUNG-HYUN	26JN19
APVD1 SONG, SEUNG-HYUN	26JN19
APVD2 SEO, JU-WON	26JN19
APVD3 PARK, JOO-HYUN	26JN19
APVD4	
APVD5	

SUBSTANCES OF CONCERN AND RECYCLED CONTENT PER APTIV [094900]

MATERIAL: SEE TABLE

DRAWING NAME: ASM CONN 10F OCS 1.2 BLK SLD

DRAWING NUMBER: 35269093

SIZE	SCALE	FRAME NO	SHEET NO	STG	REV	N/P
A0	4:1	1 OF 1	1 OF 1	R	01	-

User: dgsoft
Dataset: 35269093_C01.prt
Drawn: 35269093_C01.drw
Date: 13-Sep-19 Time: 17:16:07