

TYPE 102
SAME AS TYPE 101
EXCEPT AS SHOWN

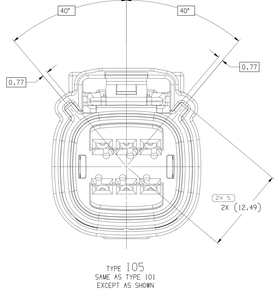

TYPE 105
SAME AS TYPE 101
EXCEPT AS SHOWN

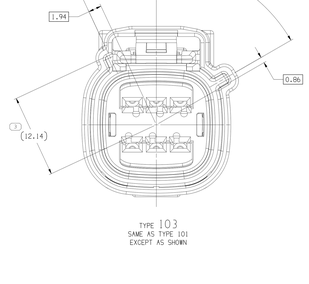

TYPE 103
SAME AS TYPE 101
EXCEPT AS SHOWN

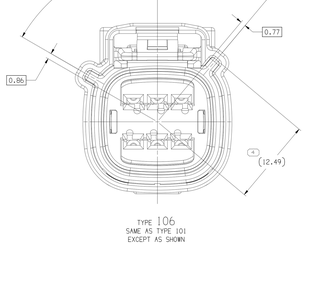

TYPE 106
SAME AS TYPE 101
EXCEPT AS SHOWN

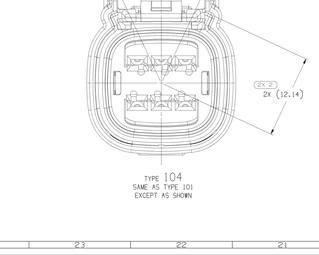

TYPE 104
SAME AS TYPE 101
EXCEPT AS SHOWN

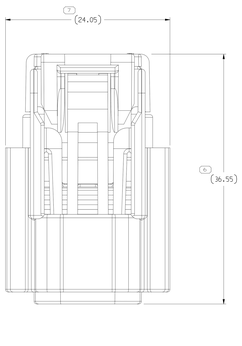

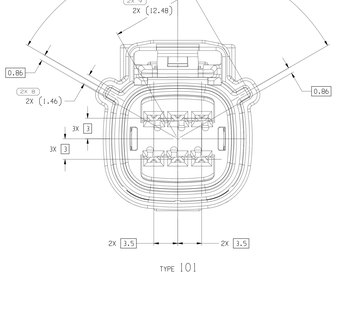

TYPE 101

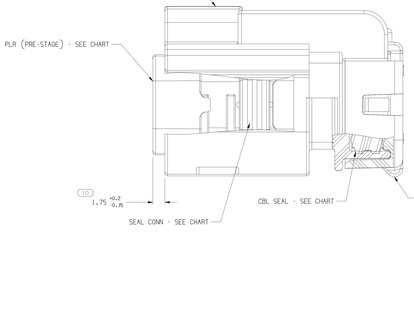

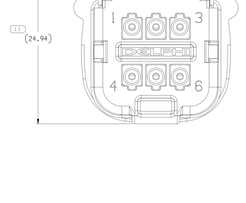

NOTES

1. UNLESS OTHERWISE SPECIFIED AND/OR INDICATED:

   DIMENSIONS ARE TO FACE OF VIEW SHOWN AND AUTOMATICALLY ROUNDED BY COMPUTER FOR INSPECTION ! SEE MATH MODEL FOR PRECISE DIMENSIONS(), FOR ALL OTHER DIMENSIONS NOT SHOWN BUT REQUIRED FOR TOOL BUILD, SEE MATH MODEL FOR PRECISE TOOL PATH DATA.

2. PART IS MANUFACTURED TO GEOMETRIC TOLERANCES. CENTERLINE DIMENSIONS ARE FOR REFERENCE ONLY.

3. SEALING CODE 4 - DESIGN WILL MEET REQUIREMENTS OF SAE/USCAR-2 CONNECTOR SYSTEM ENVIRONMENTAL TEST FLOWCHART (PRESSURE/VACUUM AND SUBMERSION).

4. THIS PRODUCT IS NOT CATEGORIZED AS AN APPEARANCE ITEM. MINOR IMPERFECTIONS INCLUDING, BUT NOT LIMITED TO, FLOW MARKS, COLOR BLEMISHES, GATE VESTIGE, AND SOFT FLASH THAT DO NOT AFFECT THE FIT, FORM, OR FUNCTION OF THE PART ARE PERMISSIBLE PER EANP_4-3_CS_01_EN.

5. FOR APPLICATION DATA SEE THE INDIVIDUAL APPLICATION DRAWINGS.

6. ASSEMBLY TO BE USED WITH APPROPRIATE APTIV HOLDER DESIGN.

7. ASSEMBLY TO BE PROCESSED USING APTIV CONNECTION SYSTEMS BEST PRACTICE METHODS AND/OR CONNECTOR ASSEMBLY INSTRUCTIONS AND APPLICABLE REPAIR PROCEDURES.

8. BEFORE TERMINAL ASSEMBLY: VERIFY THAT PLR IS IN THE PRE-STAGE POSITION ON THE CONNECTOR. IF NOT: RETURN PLR TO PRE-STAGE POSITION.

9. FOR DIFFERENT PUNCH PATTERN CONFIGURATIONS (IF AVAILABLE) SEE SHEET 2

10. FOR ASSEMBLIES WITH CPA SEE DRAWING 15513510.

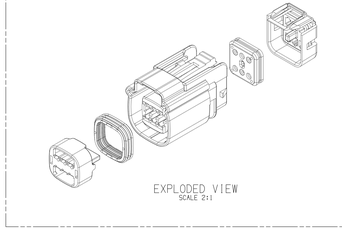

SYMBOL DEFINITION		MISSING SYMBOLS
A DIMENSION WITHOUT AN INSPECTION REPORT SYMBOL (◯) DOES NOT REQUIRE INSPECTION. IT MAY BE CONTROLLED ON THE INDIVIDUAL COMPONENT DRAWING.	TOTAL NO OF INSPECTIONS REQUIRED: 15	NO MISSING SYMBOL NUMBER
	LAST NO. USED: 11	

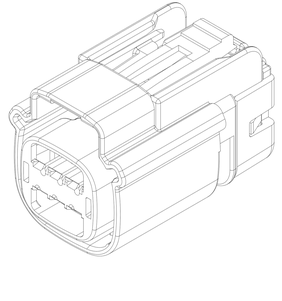

DWG STATUS					ZONE	REVISION HISTORY	AUTH	DR	APVD	APVD
DATE	SIZE	REV	N/P	CHG						
13MY13	R	01	-	-		ALL PARTS - RELEASED PART DRAWING	422466	APB	JVM	AS
14APR16	R	02	-	-		ALL PARTS - UPDATED CONN, PLR, SEAL CONN, SEAL CBL & RETAINER TO LATEST REVISION; 15532389 - 2X (12.48) WAS 2X (12.64); 15532390-91 - (12.14) WAS (12.31); 15532392 - 2X (12.14) WAS 2X (12.31); 15532393 - 2X (12.49) WAS 2X (12.66); 15532394 - (12.49) WAS (12.66)	432699	ABH	DGL	DGL	M
28JN17	R	03	-	-		ALL PARTS - ADDED "ASSEMBLY" NOTES (3 PLCS) AND UPDATED "APPEARANCE" NOTE	437088	JDM	JDM	DGL	
12FEB	R	04	-	-		ALL PARTS - UPDATED RETAINER TO LATEST REVISION	438952	DAV	JVM	ACV	
04MAY18	R	05	-	-		ALL PARTS - 1.75 +0.2/-0.35 WAS 1.75 & PSD WAS DIM # (6); 15532389 - UPDATED PART AVAILABILITY	439664	LVC	JAA	ACV	
05JL18	R	06	-	-		15532390 - UPDATED CONN TO LATEST REV; ALL PARTS - 3X [3] WAS 2X [3]	440305	CDD	CDD	ACV	
21AUG	R	07	-	-		35247624 - RELEASED	440668	SDH	JAA	VRG	
23MY19	R	08	-	-		35247624 - MOVED TO SHT 2; ALL PARTS - ADDED "PUNCH PATTERN CONFIG" AND "ASSEMBLIES WITH CPA" NOTES	443347	JDD	DSP	DSP	
28OCT	R	09	-	-		15532390 - UPDATED PART AVAILABILITY (9/N WAS NOT AVAILABLE)	555692	JDD	JAA	SV	

PART NO	REV	N/P	TYPE	CONNECTOR	PLR	SEAL CONN	SEAL CBL	RETAINER	USCAR OPTION
15532394	02	AE	106	15513502	15513516	15513518	15513515	15513512	F
15532393	02	AE	105	15513501	15513516	15513518	15513515	15513512	E
15532392	02	AE	104	15513500	15513516	15513518	15513515	15513512	D
15532391	02	AE	103	15513499	15513516	15513518	15513515	15513512	C
15532390	02	AF	102	15513498	15513516	15513518	15513515	15513512	B
15532389	02	AE	101	15513497	15513516	15513518	15513515	15513512	A

DRAWING NUMBER						
15532382						
SIZE	SCALE	FRAME NO	SHEET NO	TOTAL SHTS	REV	NOTIFY
A1x3	5:1	2 OF 2	1 OF 2	R	09	-

(N/A) PROCESS SENSITIVE DIMENSION

DIMENSIONS ENCLOSED IN ( ) INDICATE REFERENCE DIMENSIONS AND NO TOLERANCE UNLESS OTHERWISE SPECIFIED

DIMENSIONAL RANGE (MM)									
FROM	0.5	6	30	120	315	1000	2000	2500	3300
TO	6	30	120	315	1000	2000	2500	3300	5000
TOLERANCE UNLESS OTHERWISE SPECIFIED									
ISO/DIS 20457:2017	±0.25	±0.35	±0.5	±0.8	±1.2	±2	±2.5	±3.5	±5
ASME Y14.5M-2009	±0.5	±0.5	±0.5	±0.8	±1.2	±2	±2.5	±3.5	±5

ALL DIMENSIONS ARE IN MILLIMETERS

REFERENCE:

THIRD ANGLE PROJECTION

DO NOT SCALE

USE MATH DATA

NX

"•" LINE DRAWN THROUGH A PART NUMBER INDICATES THAT PHYSICAL PARTS ARE NOT AVAILABLE FOR ORDERING.

PART NUMBERS THAT DO NOT HAVE A • THROUGH THEM ARE AVAILABLE FOR ORDERING.

CONTACT APTIV SALES TO ASSURE AVAILABILITY OF PARTS.

DWG TYPE	PART DRAWING
STYLE	
VOLUME (CM³)	SYSTEM UNIT: D

UNLESS OTHERWISE SPECIFIED

THIS DOCUMENT IS IN ACCORDANCE WITH ASME Y14.5M-1994 UNLESS OTHERWISE SPECIFIED. GENERAL TOLERANCING ASSUMES DIRECT, SEPARATE PATTERNS OF FEATURES, MAY BE GAGED SEPARATELY REGARDLESS OF DATUM REFERENCES.

APVD2	ALAIN PREVOST	1 MY 13
APVD3	JV(ILLAMIL	1 MY 13
APVD4	ALICIA GUERRERO	1 MY 13
APVD5		
APVD6		

SUBSTANCES OF CONCERN AND RECYCLED CONTENT PER APTIV STANDARDS

SIZE	SEE CHART
DRAWING NAME	TAX1 ASM CONN 6 F OCS 1.5 SLD
DRAWING NUMBER	15532382
SIZE	A1x3
SCALE	5:1
FRAME NO	1 OF 2
SHEET NO	1 OF 2
TOTAL SHTS	R
REV	09
NOTIFY	-

THIS DRAWING IS THE PROPERTY OF APTIV AND CONTAINS APTIV PROPRIETARY INFORMATION. ANY REPRODUCTION, DISTRIBUTION OR UTILIZATION OF THIS DOCUMENT OR ITS RELATED CAD DATA, AS WELL AS COMMUNICATION OF ANY CONTENT TO OTHERS, WITHOUT EXPRESS AUTHORIZATION, IS PROHIBITED.

COPYRIGHT 2019 APTIV. ALL RIGHTS RESERVED.

APTIV
CONNECTION SYSTEMS
WARREN, OH

Trial 13114326
Plotted: 10/31/2019 08:04:09 AM
Plotted By: Sonia Alfaro (21)
Drawing Path: C:\Users\sa21\Desktop\Sonia Alfaro\Part 1\15532382_09.dft