NOMENCLATURE
PARTS LIST

REP.	QUANTITE / QUANTITY	DESIGNATION	MATIERE / MATERIAL	COULEUR / COLOUR	REFERENCE MVL / MVL P/N
3	1	VERROU-SECONDAIRE / SECONDARY-LOCK	PBT GF 15	VERT / GREEN	250 M 5 008
2	1	ETRIER / SLIDE	PA 6/6 GF 30	NOIR / BLACK	250 M 0 001
				GRIS / GREY	250 M 8 001
1	1	ISOLANT PORTE-CLIPS 22 VOIES FIL / 22-WAY WIRE FEMALE HOUSING	PBT GF 15	SELON VERSION / ACCORDING TO VERSION	250 1 X 008

PRINCIPALES PROPRIETES MECANIQUES / MAIN MECHANICAL PROPERTIES	VALEURS / VALUES
CLASSE DE TEMPERATURE / OPERATING TEMPERATURE	-40° / +85° POUR INFO / FOR INFO
CLASSE DE VIBRATION / VIBRATION CLASS	I POUR INFO / FOR INFO
EFFORT D'ACCOUPLEMENT DU CONNECTEUR SUR INTERFACE / CONNECTOR MATING FORCE ON INTERFACE	<= 60 N
TENUE A L'ARRACHEMENT DU CONNECTEUR SUR INTERFACE / CONNECTOR RETENTION FORCE ON INTERFACE	> 100 N
EFFORT DE DESACCOUPLEMENT / CONNECTOR UNMATING FORCE	<= 60 N
MONTAGE SUR ATTACHE / ATTACHMENT MATING FORCE ON PC	<=30N
TENUE A L'ARRACHEMENT DE L'ATTACHE / ATTACHMENT RETENTION FORCE ON PC	>=60N

DESIGNATION	REFERENCE MVL / MVL P/N
PORTE-LANGUETTES 22 VOIES FIL / 22-WAY WIRE MALE CONNECTOR	250 PL 22 9 S X 00A

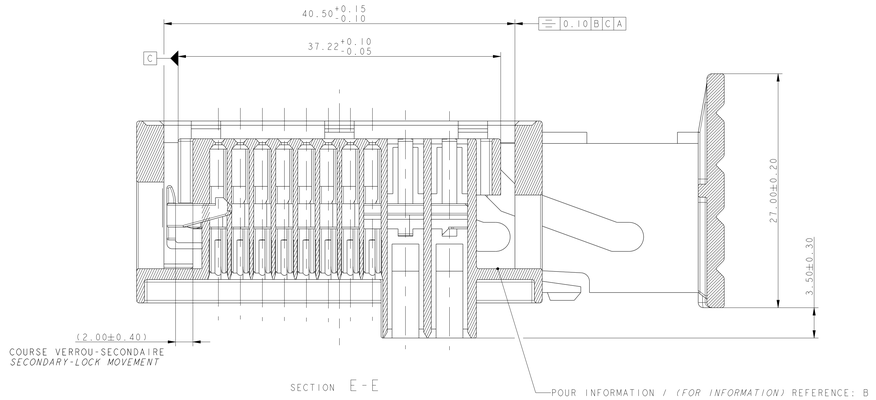

SECTION E-E

ETAT DE LIVRAISON ETRIER VERROUILLE
SLIDE LOCKED DELIVERY STATE
ECHELLE / SCALE 2:1

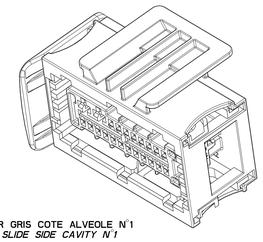

NOTE: ETRIER GRIS COTE ALVEOLE N°1
GREY SLIDE SIDE CAVITY N°1

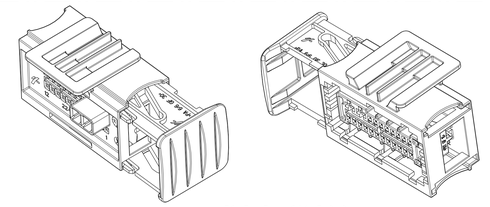

ECHELLE / SCALE 3:2

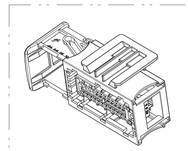

ECHELLE / SCALE 1:1

VOIR DETAIL ALVEOLE 0.635
SEE DETAIL CAVITY 0.635

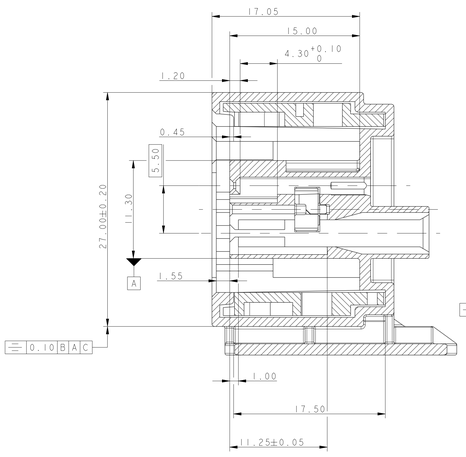

SECTION D-D

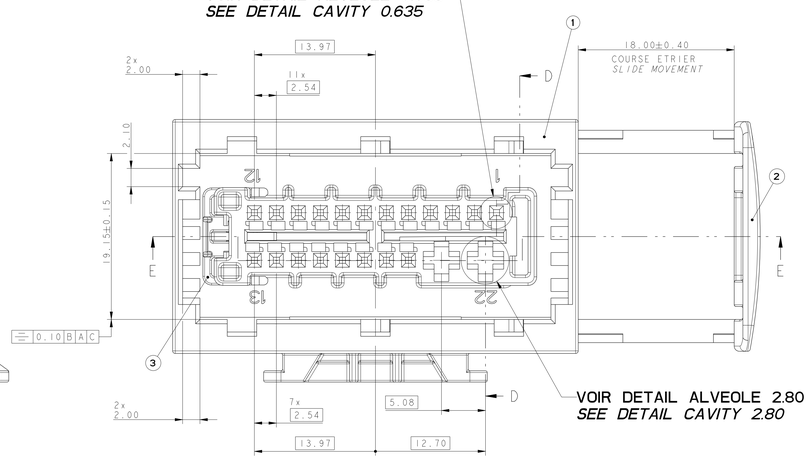

VOIR DETAIL ALVEOLE 2.80
SEE DETAIL CAVITY 2.80

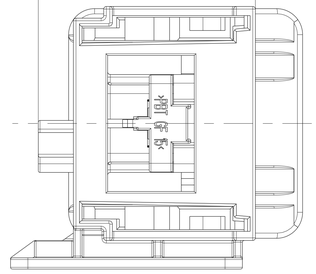

VUE ARRIERE
REAR VIEW

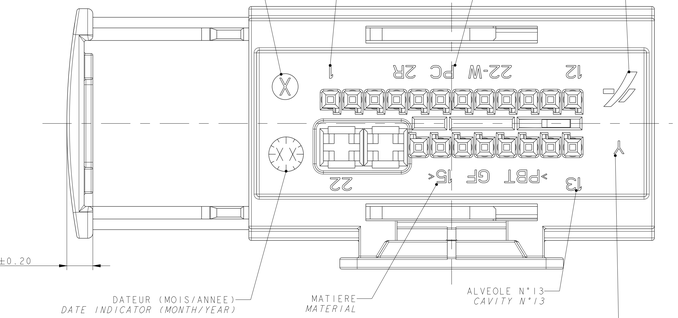

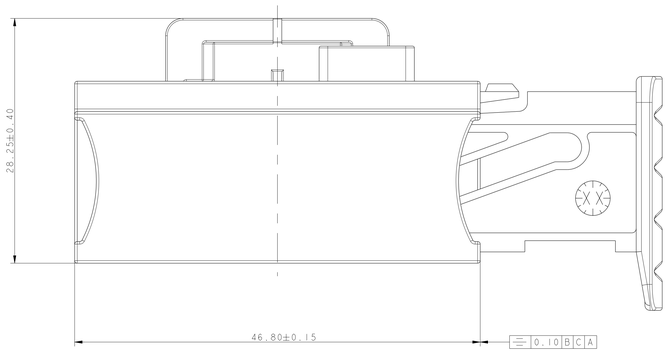

DETAIL ALVEOLE 0.635
DEATIL CAVITY 0.635
ECHELLE / SCALE 15:1

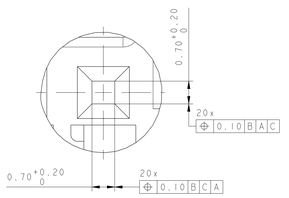

DETAIL ALVEOLE 2.80
DETAIL CAVITY 2.80
ECHELLE / SCALE 15:1

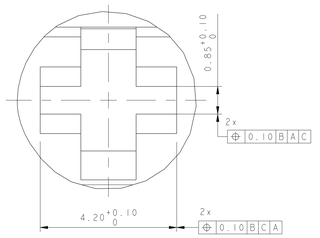

NOTE: LE MODELE REPRESENTE EST LE CODAGE NOIR
NOTE: THE SHOWN VERSION IS THE BLACK ONE

SPECIFICATION DE CONDITIONNEMENT / PACKAGING SPECIFICATION	MISE EN OEUVRE / APPLICATION SPECIFICATION
CONFORME A LA NORME GALIA / ACCORDING TO GALIA SPECIFICATION / VOIR DOSSIER DE PRECONISATION PU 042 / SEE USER'S MANUAL PU 042	DOSSIER DE PRECONISATION: PU 042 / USER'S MANUAL: PU 042

NOTA: Ce plan etant un extrait du plan de definition, on fera reference pour tout litige au plan de definition. toutes cotes non respectees sur un lot donnera lieu au refus du lot.
NOTE: The present drawing being an abstract of the definition drawing, any dispute will be referred to the definition drawing. any wrong dimension of one part in one batch will entrail rejection of the whole batch.

CREATION

PRODUCT SPEC. / SPECIF. PRODUIT	18 00 196
TOLERANCES	±0.1 ±2°
DIMENSIONS IN / UNITE MESURE	
DO NOT MEASURE DRAWING / NE PAS PRENDRE LES COTES SUR LE PLAN	
CREATED BY / CREE PAR	2014/09/01 J.NOLLANDE
MODIFIED BY / MODIF. PAR	2014/11/27 F.FAURE
CHECKED BY / VERIFIE PAR	2014/11/27 S.LACOTE
APPROVED BY / APPROUVE PAR	2014/11/27 Pascal MENARD
NEW FICHEX / NOUVELLE FICHEX	PCC0847718
MATERIAL / MATIERE	SEE TABLE
COLOUR / COULEUR	SEE TABLE
TOOL NO. / MOULE N°	-
SPECIFICATION	22-WAY WIRE FEMALE CONNECTOR
PROJECT / PROJET	FLEX CONNECTOR MODUPACK
CUST. REF. NO. / REF. CLIENT N°	FRA-2096
DOCUMENT CAT. / CAT. DOCUMENT	150 PC 22 9 S X 00A
DOCUMENT UNDER PCN CONTROL / DOCUMENT SOUS CONTROLE DE MODIFICATION	ALLOWED (DATE OF MODIFICATION IN DETAIL) / AUTORISE (DATE DE MODIFICATION EN DETAIL)
SURFACE FINISH / ETAT DE SURFACE	-
TOOTH. CHAR. / CODE DENT	FE
DRAWING NUMBER / N° PLAN	PCC0847718
STATE / ETAT	A
CUST. PART NUMBER / REF. ARTICLE CLIENT	SERIAL RELEASED
SCALE / ECHELLE	See Table
CAD SYSTEM	pro / eng.
DRG SIZE / FORMAT	A0
DIMENSION IN MILLIMETERS / DIMENSIONS EN MILLIMETRES	ISO PROJECTION / PROJECTION ISO
APPROVAL LEVEL / NIV. D'APPROBATION	PRO / PRO
SHEET / FEUILLE	1 of / sur 2
SHEETS / FEUILLES	2

DELPHI PACKARD ELECTRONICS (STRASBOURG) STRASBOURG, FRANCE
© DLPH (LUX) S.A. PROPRIETE DE DELPHI CORPORATION AND/OR SES AFFILIEES. TOUS DROITS RESERVES. CE DESSIN EST LA PROPRIETE DE DELPHI CORPORATION ET/OU DE SES AFFILIEES. IL NE DOIT PAS ETRE COPIE, REPRODUIT OU DIVULGUE SANS AUTORISATION ECRITE PREALABLE DE DELPHI CORPORATION ET/OU DE SES AFFILIEES. IL NE DOIT PAS ETRE UTILISE DIRECTEMENT OU INDIRECTEMENT DANS UNE ACTION CONTRE DELPHI CORPORATION ET/OU DE SES AFFILIEES. / © DLPH (LUX) S.A. PROPERTY OF DELPHI CORPORATION AND/OR ITS AFFILIATES. ALL RIGHTS RESERVED. REVISED THIS DRAWING IS THE PROPERTY OF DELPHI CORPORATION AND/OR ITS AFFILIATES. IT SHALL NOT BE COPIED, REPRODUCED OR DISCLOSED WITHOUT PRIOR WRITTEN AUTHORIZATION OF DELPHI CORPORATION AND/OR ITS AFFILIATES. IT SHALL NOT BE USED DIRECTLY OR INDIRECTLY IN ANY ACTION AGAINST DELPHI CORPORATION AND/OR ITS AFFILIATES.

POUR INFORMATION
FOR INFORMATION

VUE AVANT ACCOUPLEMENT (ACCOSTAGE)
VIEW BEFORE MATING (ACCOSTING)

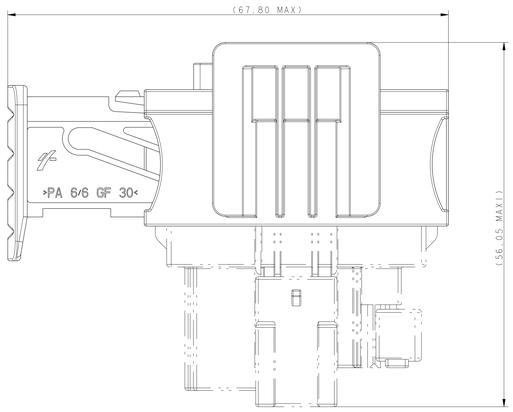

ECHELLE / *SCALE* 3:1

VUE APRES ACCOUPLEMENT
VIEW AFTER MATING

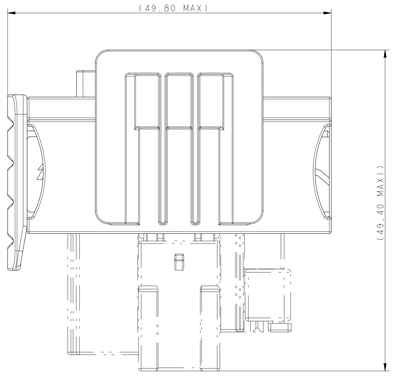

ECHELLE / *SCALE* 3:1

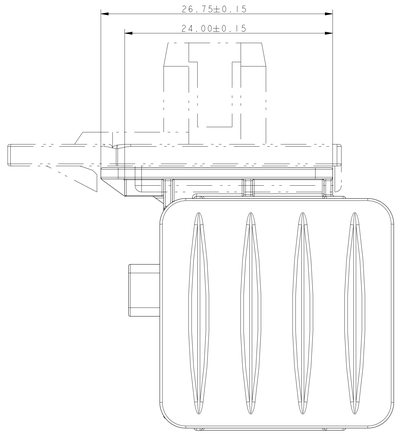

COUPE / *SECTION* F-F

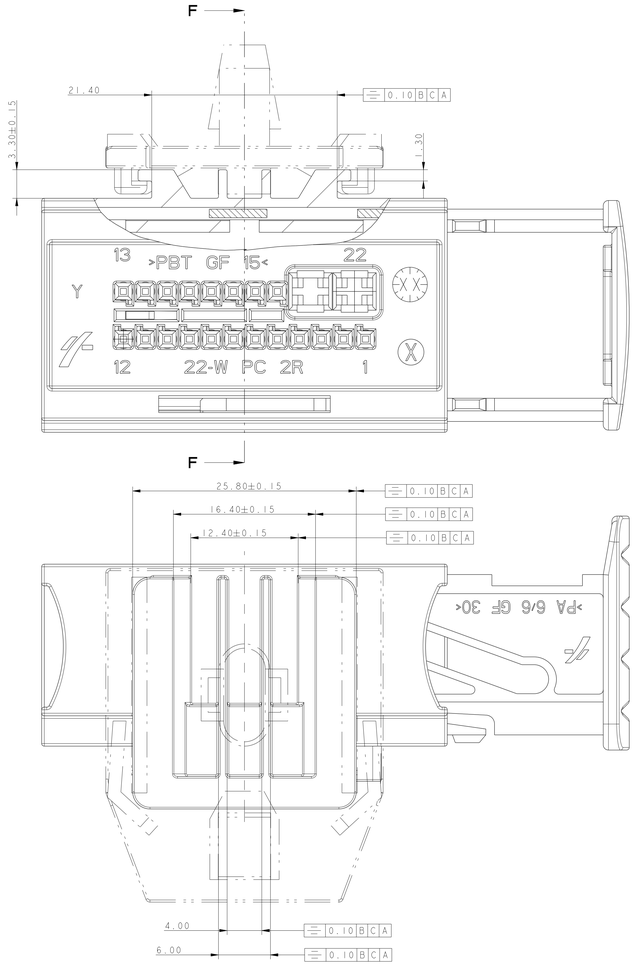

COUPE / *SECTION* G-G

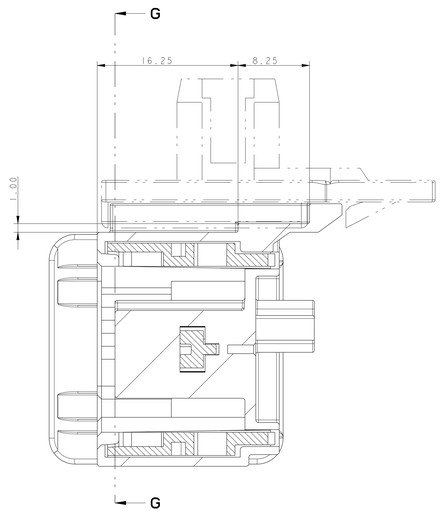

ATTACHE REVERSIBLE
REVERSIBLE FASTENER

POSITION 1	POSITION 2
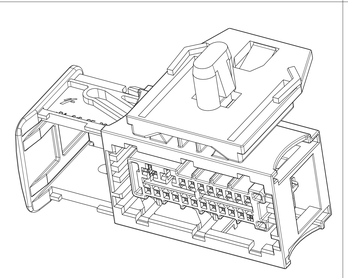	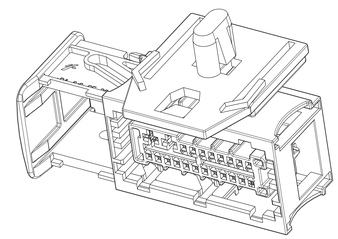
ECHELLE / *SCALE* 2:1	ECHELLE / *SCALE* 2:1

TABLE DES VERSIONS / *VERSIONS LIST*

REFERENCE DELPHI / *DELPHI P/N*	33500338	33522304	33522305	33522306	33522307	33522308	33522309
REFERENCE MVL / *MVL P/N*	250 PC 22 9 S 0 002	250 PC 22 9 S 1 002	250 PC 22 9 S 2 002	250 PC 22 9 S 3 002	250 PC 22 9 S 5 002	250 PC 22 9 S 6 002	250 PC 22 9 S 7 002
VUE AVANT *FRONT VIEW* ETRIER NOIR ALVEOLE N°13 *BLACK SLIDE CAVITY N°13*	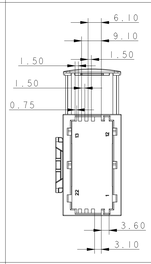	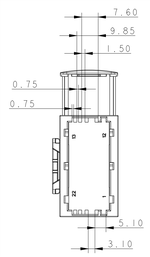	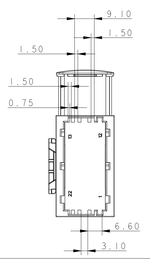	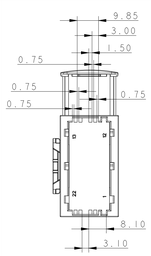	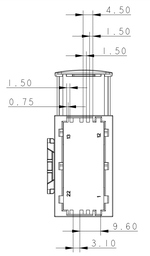	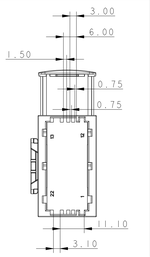	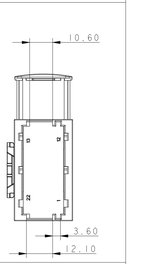
COULEUR CODAGE *CODING COLOUR*	NOIR *BLACK*	MARRON *BROWN*	ROUGE *RED*	ORANGE *ORANGE*	VERT *GREEN*	BLEU *BLUE*	VIOLET *PURPLE*
VUE AVANT *FRONT VIEW* ETRIER GRIS ALVEOLE N°1 *GREY SLIDE CAVITY N°1*	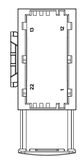	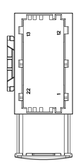	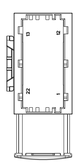	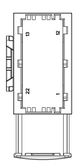	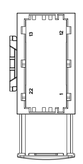	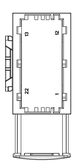	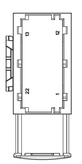
REFERENCE DELPHI / *DELPHI P/N*	10811787	33522298	33522299	33522300	33522301	33522302	33522303
REFERENCE MVL / *MVL P/N*	250 PC 22 9 S 0 001	250 PC 22 9 S 1 001	250 PC 22 9 S 2 001	250 PC 22 9 S 3 001	250 PC 22 9 S 5 001	250 PC 22 9 S 6 001	250 PC 22 9 S 7 001

NOTE: LE MODELE REPRESENTE EST LE CODAGE NOIR
NOTE: THE SHOWN VERSION IS THE BLACK ONE

ECN NO / *NUMERO ECR*	POSITION / *POSITION*	CHANGE DESCRIPTION / *MODIFICATION*
-	-	-
-	-	-
-	-	-
-	-	CREATION

PRODUCT SPEC. / *SPECIF. PRODUIT*	PACKAGING SPEC. / *SPECIF. EMBALLAGE*	APPLICATION SPEC. / *SPECIF. APPLICATION*	COPYRIGHT DELPHI CORPORATION AND/OR ITS AFFILIATES. ALL RIGHTS RESERVED. REVISED
10 00 196	-	-	THIS DRAWING IS THE PROPERTY OF DELPHI CORPORATION AND CONTAINS DELPHI CONFIDENTIAL INFORMATION. THE REPRODUCTION, DISTRIBUTION AND UTILIZATION OF THIS DRAWING, AND THE COMMUNICATION OF ITS CONTENTS TO OTHERS, WITHOUT EXPRESS AUTHORIZATION, IS PROHIBITED. IT MAY BE USED SOLELY AS AUTHORIZED IN WRITING BY DELPHI CORPORATION AND/OR ITS AFFILIATES. ALL RIGHTS RESERVED. REVISED IN THE EVENT OF A DISPUTE, THE ENGLISH VERSION SHALL GOVERN.
TOLERANCES / *TOLERANCES*	±0.1 ±2°	MATERIAL / *MATIERE*	SEE TABLE
CONFORMITE N° / *CONFORMITE N°*	-	COLOUR / *COULEUR*	SEE TABLE
DO NOT MEASURE DRAWING / *NE PAS PRENDRE DE COTES*		TOOL NO. / *OUTIL N°*	-
		TOOL N°. / *OUTIL N°.*	-

	DATE / *DATE*	NAME / *NOM*
DRAWN BY / *DESSINE PAR*	20140903	J-HOLLANDE
MODIFIED BY / *MODIF. PAR*	20141127	P-FAURE
CHKD BY / *VERIF. PAR*	20141127	G-LACOTE
APPRVD BY / *APPR. PAR*	20141127	Pascal MICHARD
FILE NAME / *NOM DE FICHIER*	PCC0847718	

SURFACE FINISH / *ETAT DE SURFACE*	-
MOLDING SHRINK / *RETRAIT MOULE*	FE
TITLE / *DESIGNATION*	22-WAY WIRE FEMALE CONNECTOR
PROJECT / *PROJET*	FLEX CONNECTOR MODUPACK
DUR NO. / *NUMERO DUR*	FRA-2996
DOCUMENT UNDER PDS CONTROL / *DOCUMENT GERE PAR P.D.T.*	NO MODIFICATION ALLOWED UNLESS SIGNED BY AUTHORIZATION OF DELPHI

DELPHI
DELPHI PACKARD ELECTRIC SYSTEMS, 78300 POISSY, FRANCE
CAD SYSTEM: pro / eng.
UNLESS OTHERWISE SPECIFIED: DIMENSION IN MILLIMETER / TOLERANCE PER ISO 2768 m
DRAWING NUMBER / *REF. PLAN*: PCC0847718
REV. / *IND.*: A
STATE / *ETAT*: SERIAL RELEASED
PART NUMBER / *REF. ARTICLE*: See Table
SHEET / *FEUILLET*: 2 of / *de* 2
SCALE / *ECH.*: 4:1

NOTA: Ce plan etant un extrait du plan de definition, on fera reference pour tout litige au plan de definition. toutes cotes non respectees sur un lot donnera lieu au refus du lot.
NOTE: The present drawing being an abstract of the definition drawing, any dispute will be referred to the definition drawing. any wrong dimension of one part in one batch will entrail rejection of the whole batch.