SYMBOL DEFINITION		
A DIMENSION WITHOUT AN INSPECTION REPORT SYMBOL DOES NOT REQUIRE INSPECTION. IT MAY BE CONTROLLED ON THE INDIVIDUAL COMPONENT DRAWING.	TOTAL NO OF INSPECTIONS REQUIRED	39
	LAST NO. USED	20

MISSING SYMBOLS

NO MISSING SYMBOL NUMBER

DWG STATUS					ZONE	REVISION HISTORY	AUTH	DR	APVD 1	APVD 2	
DATE	STG	REV	N/P	CHG							
29MY17	R	01	-	-		WAS PE370412 AND RELEASED PD	436721	APB	APB	EDA	
07SE17	R	01	AA	-		UPDATED PDM ATTRIBUTES	437714	JVM	JVM	MNC	M
30NO17	R	01	AB	-		ADDED FLAME RETARDANT NOTE AND UPDATED MATERIAL GENERIC CALLOUT	438293	JVM	JVM	MNC	
02MY18	R	01	AC	-		18.1 0/-0.1 WAS 18 0/-0.1, 2X 4.7 ±0.1 WAS 2X 4.73 ±0.1, 2X 2.23 TYP WAS 2X 2.5 TYP, 2X 3.8 +0.1/-0.15 TYP WAS 2X 3.82 +0.05/-0.15 TYP AND 2X 40° TYP WAS 2X 30° TYP AND ADDED DIM (1 PLC)	439725	AGC	AGC	MNC	
22AU18	R	01	AD	-		REVISED GRAPHICS	440694	ESC	ESC	EDA	
25JN19	R	01	AE	-		UPDATED PART AVAILABILITY	443769	GDH	JAA	LES	

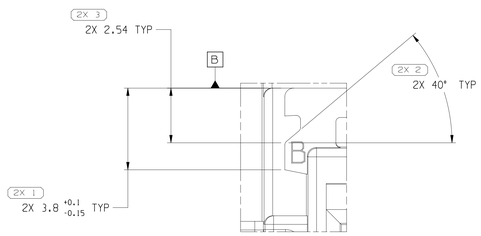

DETAIL A
SCALE 10:1

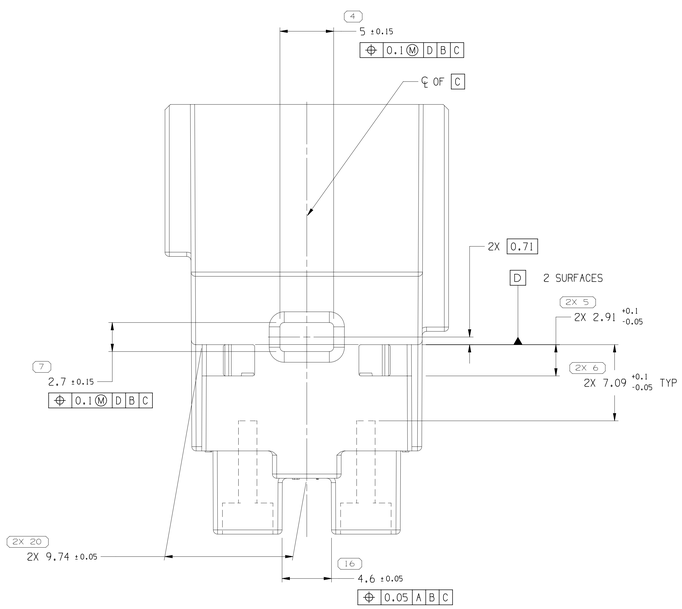

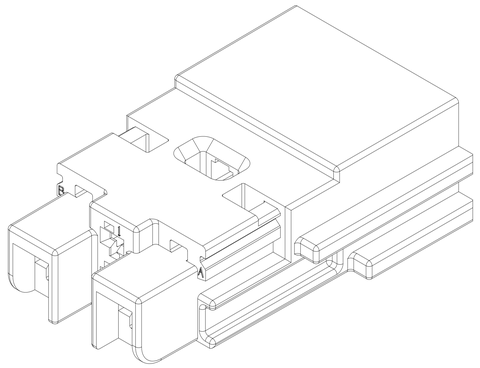

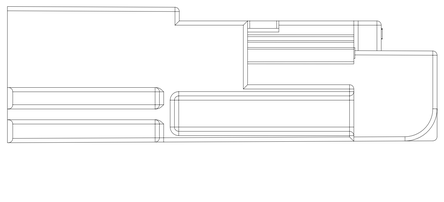

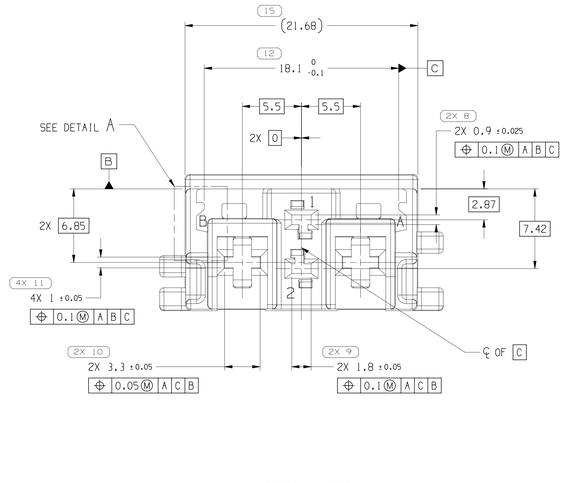

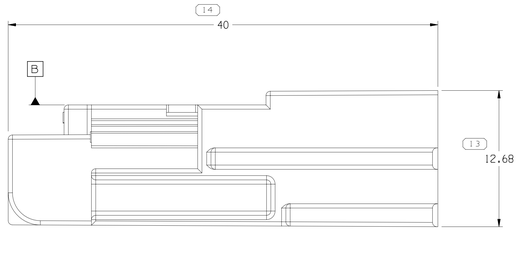

NOTES

1. UNLESS OTHERWISE SPECIFIED AND/OR INDICATED:

   DIMENSIONS ARE TO FACE OF VIEW SHOWN AND AUTOMATICALLY ROUNDED BY COMPUTER FOR INSPECTION (SEE MATH MODEL FOR PRECISE DIMENSIONS). FOR ALL OTHER DIMENSIONS NOT SHOWN BUT REQUIRED FOR TOOL BUILD, SEE MATH MODEL FOR PRECISE TOOL PATH DATA.

2. TO ASSURE CORRECT TERMINAL POSITION, AN ELECTRICAL TEST HOLDER APPROVED BY BOTH THE DELPHI PACKARD NORTH AMERICA PRODUCT LINE ENGINEER AND ASSEMBLY TOOLING BUSINESS UNIT MUST BE USED. FAILURE TO USE AN APPROVED TEST HOLDER MAY RESULT IN UNSEATED TERMINALS.

3. THIS PRODUCT IS NOT CATEGORIZED AS AN APPEARANCE ITEM, MINOR IMPERFECTIONS INCLUDING, BUT NOT LIMITED TO, FLOW MARKS, COLOR BLEMISHES, GATE VESTIGE, AND SOFT FLASH THAT DO NOT AFFECT THE FIT, FORM, OR FUNCTION OF THE PART ARE PERMISSIBLE PER EANP_4-3_CS_01_EN.

4. CORPORATE BRAND TO BE APPLIED TO PRODUCT DESIGN PER THE LATEST REVISION OF ESD S1085201.

5. FOR APPLICATION DATA SEE THE APPLICATION DRAWING.

6. HALOGEN-FREE FLAME RETARDANT (UL94 V-0) POLYESTER COMPOUND.

A ⁄ LINE DRAWN THROUGH A PART NUMBER INDICATES THAT PHYSICAL PARTS ARE NOT AVAILABLE FOR ORDERING.

PART NUMBERS THAT DO NOT HAVE A / LINE PRESENT INDICATE THAT PHYSICAL PARTS ARE AVAILABLE FOR ORDERING.

CONTACT APTIV SALES TO ASSURE AVAILABILITY OF PARTS.

DWG TYPE: PART DRAWING

STYLE

VOLUME (CM³): 5.677

DISTR CODE

UNLESS OTHERWISE SPECIFIED
THIS DOCUMENT IS IN ACCORDANCE WITH ASME Y14.5M-1994 AS AMENDED BY THE GM GLOBAL DIMENSIONING AND TOLERANCING ADDENDUM 2001. SEPARATE PATTERNS OF FEATURES MAY BE GAGED SEPARATELY REGARDLESS OF DATUM REFERENCES.

ALL DIMENSIONS ARE IN MILLIMETERS

REFERENCE

(16) PROCESS SENSITIVE DIMENSION

DIMENSIONS ENCLOSED IN ( ) INDICATE REFERENCE DIMENSIONS AND NO TOLERANCE LIMITS ARE ESTABLISHED

DIMENSIONAL RANGE (MM)									CHART E1
FROM	> 0	>20	> 30	> 70	>100	>150	>200	>250	>300
TO	20	30	70	100	150	200	250	300	400
TOLERANCE UNLESS OTHERWISE SPECIFIED									
	±0.15	±0.2	±0.3	±0.4	±0.5	±0.6	±0.8	± 1	± 1.2

ANGULAR TOLERANCE ±2°

THIRD ANGLE PROJECTION

DO NOT SCALE
USE MATH DATA

NX

•APTIV•

CONNECTION SYSTEMS
WARREN, OH

COPYRIGHT 2017 APTIV. ALL RIGHTS RESERVED.
THIS DRAWING IS THE PROPERTY OF APTIV AND CONTAINS APTIV CONFIDENTIAL INFORMATION. THE REPRODUCTION, DISTRIBUTION AND UTILIZATION OF THIS DOCUMENT OR ITS RELATED CAD MATH DATA, AS WELL AS COMMUNICATION OF ANY CONTENT TO OTHERS, WITHOUT EXPRESS AUTHORIZATION, IS PROHIBITED.

	DATE
DR	
APVD1 ALAIN PREVOST	29MY17
APVD2 ALAIN PREVOST	29MY17
APVD3 EDUARDO DIAZ A.	29MY17
APVD4	
APVD5	

SUBSTANCES OF CONCERN AND RECYCLED CONTENT PER APTIV 10949001

MATERIAL: POLYESTER COMPOUND GREEN V0

DRAWING NAME: CONN 4 F CTS 150 M/P 280 H/VOLTAGE

DRAWING NUMBER: 33336179

SIZE	SCALE	FRAME NO	SHEET NO	STG	REV	N/P
A0	5:1	1 OF 1	1 OF 1	R	01	AE

User: ulfe
Dataset: 33336179_SOLIDMODEL_Planet 01-Jul-19
Format: A0_Aptiv_Portrait_Planet 01-Jul-19 Time: 15144146