RECEPTACLE HOUSING 10 WAY	
APTIV P/N	CODING
13944330	CODING - A

SCALE 2:1

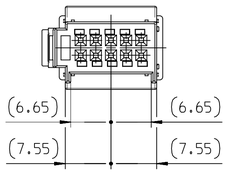

13944875	CODING - B

SCALE 2:1

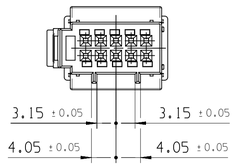

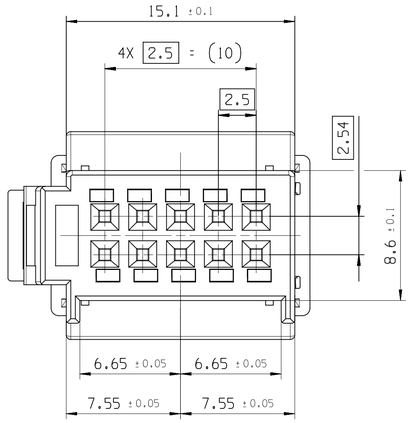

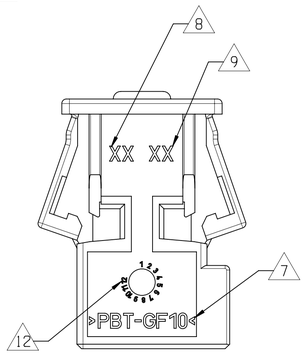

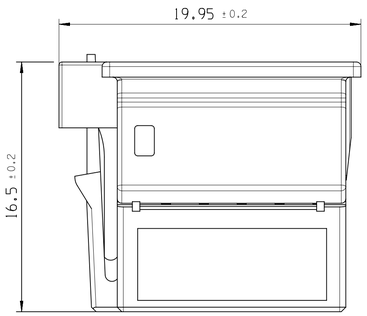

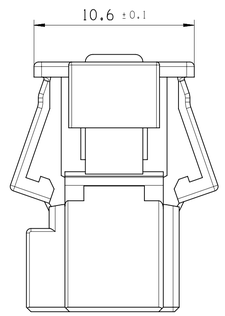

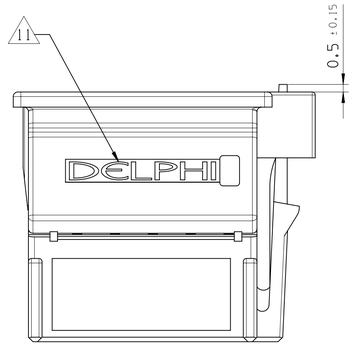

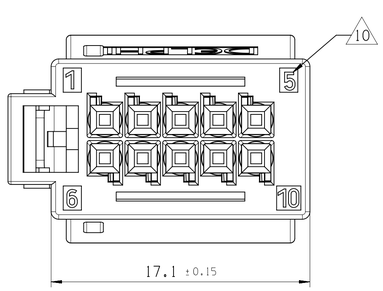

NOTE	SPECIFICATIONS
1	FEMALE CONNECTOR ACCORDING TO APTIV SPECIFICATION: CAQE TBD
2	FEMALE CONNECTOR ACCORDING TO: -TEMPERATURE CLASS TX -ENGINE VIBRATOR CLASS VX -SEALING CLASS EX
3	USER'S MANUAL: 13944885-CUS76-SOI
4	DELIVERY CONNECTOR WEIGHT : SEE TABLE
5	NO WAFER HINGE OR WAFER HINGE BROKEN ALLOWED
6	VISUAL DEFECTS ON NO FUNCTIONNAL AREAS ALLOWED
△7	MATERIAL NAME
△8	TOOL CAVITY NUMBER
△9	INDEX REPLCEMENT INSERT
△10	PART CAVITY NUMBER
△11	SUPPLIER LOGO
△12	DATE INSERT

OVERALL DIMENSION FOR MOUNTABILITY

SECONDARY LOCKING
IN END LOCKED POSITION

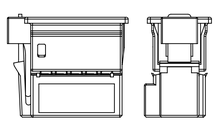

MOUNTING OPENING

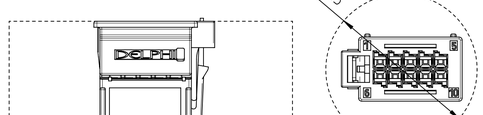

ASSOCIATED PARTS (FOR INFORMATION)

DESCRIPTION	APTIV P/N	WIRE SECTION	DIAMETER OF WIRE SIZE
MATING PART	13944886	-	-
FEMALE TERMINAL MQS 0.63	13580658	0.75mm²	1.9

DESCRIPTION	CODE	APTIV PART NUMBER	WEIGHT (kg)	MATERIAL	COLOR
RECEPTACLE HOUSING 10 WAY	B	13944875	0.0019	PBT-GF10	NATURE
	A	13944330	0.0019	PBT-GF10	BLACK

A ⟋ LINE DRAWN THROUGH A PART NUMBER INDICATES THAT PHYSICAL PARTS ARE NOT AVAILABLE FOR ORDERING.

PART NUMBERS THAT DO NOT HAVE A LINE PRESENT INDICATE THAT PHYSICAL PARTS ARE AVAILABLE FOR ORDERING.

CONTACT APTIV SALES TO ASSURE AVAILABILITY OF PARTS.

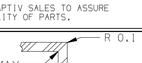

SHARP CORNER TOLERANCE

DIM TO CHECK	DIMENSIONAL RANGE (MM)									CHART E1
( ) DIM FOR HELP	FROM / TO	> 0 20	> 20 30	> 30 70	> 70 100	>100 150	>150 200	>200 250	>250 300	>300 400
THEORETIC DIM	TOLERANCE UNLESS OTHERWISE SPECIFIED	±0.15	±0.2	±0.3	±0.4	±0.5	±0.6	±0.8	±1	±1.2
	ANGULAR TOLERANCE ±2°									

REVISION HISTORY						
DWG STATUS DATE	STG	REV	N/P	CHG	ZONE	AUTH	DR	APVD 1	APVD 2
21DE21	R	01					P.BAL	M.LAG	M.LAG
INITIAL RELEASE									

3D VIEW



SCALE 1:1

DWG TYP
CUSTOMER PART DRAWING

WEIGHT (GR)
SEE CHART

VOLUME (CM³)

ROUTING

DISTR CODE
D

UNLESS OTHERWISE SPECIFIED

GENERAL TOLERANCES ACCORDING TO:

SEE CHART

GD&T ACCORDING TO:

ISO 1101

REFERENCE

FIRST ANGLE PROJECTION

DO NOT SCALE

USE MATH DATA

CAD NX

•APTIV•

CONNECTION SYSTEMS

Chennai, India

COPYRIGHT 2021 APTIV. ALL RIGHTS RESERVED.

THIS DRAWING IS THE PROPERTY OF APTIV AND CONTAINS APTIV CONFIDENTIAL INFORMATION. THE REPRODUCTION, DISTRIBUTION AND UTILIZATION OF THIS DOCUMENT OR ITS RELATED CAD MATH DATA, AS WELL AS COMMUNICATION OF ANY CONTENT TO OTHERS, WITHOUT EXPRESS AUTHORIZATION, IS PROHIBITED.

		DATE
DR	P.BALAJI	21DE21
APVD1	LAGUETTE MAURICE	21DE21
APVD2	LAGUETTE MAURICE	21DE21
APVD3		
APVD4		
APVD5		

'SUBSTANCES OF CONCERN AND RECYCLED CONTENT PER APTIV 10949001

MATERIAL
SEE CHART

DRAWING NAME
RECEPTACLE HOUSING 10 WAY
FOR MTS/MQS 0.63

DRAWING NUMBER
3351743 1

SIZE	SCALE	FRAME NO	SHEET NO	STG	REV	N/P
A1	5:1	1 OF 1	1 OF 1	R	01	

User: KZ59TM
Path: K:\Projects\MTS\MTS-CUS02-SOI\01
K:\Projects\MTS\MTS-CUS02-SOI\01\13944875-CUS02-SOI_K259TM_02252022_10120_1288pages.cus
Date: 25-Feb-22 Time: 14:50:47