CTCS XP SERIES

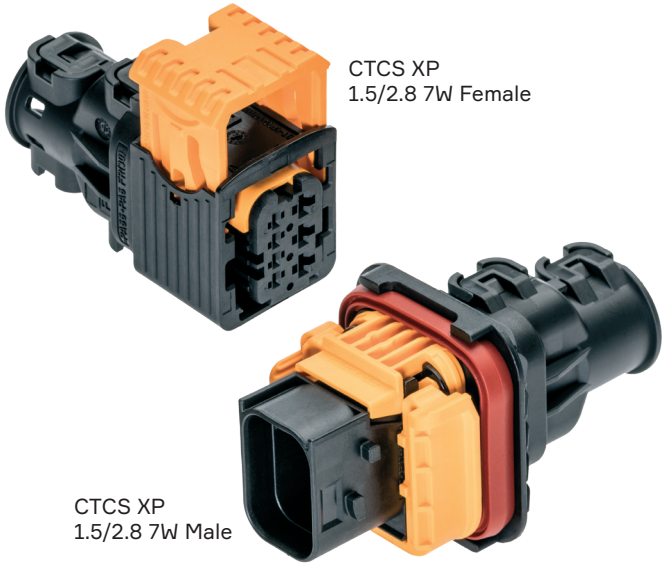

CTCS XP
1.5/2.8 7W Female

CTCS XP
1.5/2.8 7W Male

BENEFITS

- Versatile connection system
- Unparalleled reliability and performance
- Designed for the transportation market

FEATURES

- Optional back shells in 180˚ and 90˚ angles with additional ribbing for improved vibration performance
- 0-gap design of back shells provides superior protection against dust and debris ingress
- Locking features on slides prevent accidental release of connectors prior to full mating

AVAILABLE CONFIGURATIONS

Cavity Count (ways)	2, 3, 4, 6, 7, 8, 10, 12, 15, 16, 18
Cavity Configurations (mm)	1.5, 2.8, 6.3, Mixed
Materials	V0
Genders	Female, Male
Lock Assist Type	Slider lock
Mounting Options	Panel, Strap/Clip

APPLICATIONS

Chassis
Engine compartment
On-engine

See back page for representative part numbers and packaging dimensions.

TEMPERATURE



VIBRATION



Sine (G)

Random (Grms)

SEALING PROTECTION (IEC, ISO)



Water Intrusion

High Pressure Spray

About Aptiv

Aptiv is a global technology company that develops safer, greener and more connected solutions enabling the future of mobility.

Visit **aptiv.com** →



aptiv.com | © 2024 Aptiv. All rights reserved

APTIV

Cavity count	Blade size (mm)	Gender	Dimensions W x H x D (mm)	V0 part number	Mounting type	Index	Color	Other indexes offered
2	1.5	F	25.8 x 18.9 x 31.25	33253266	Universal	A	Black	B, C, D
2	2.8	F	25.8 x 18.9 x 31.25	33253554	Universal	A	Black	B, C, D
2	2.8	M	37.5 x 29.8 x 48.3	33254221	Panel	A	Black	B, C, D
2	6.3	F	31.4 x 26.1 x 31.25	33285119	Universal	A	Black	B, C, D
2	6.3	M	42.5 x 39.8 x 50.4	33285118	Panel	A	Black	B, C, D
2	6.3	M	33.2 x 27 x 50.4	33341148	Strap/Clip	A	Black	B, C, D
3	1.5	F	25.8 x 18.9 x 31.25	33253275	Universal	A	Black	B, C, D
3	1.5	M	37.5 x 29.8 x 48.3	33254285	Panel	A	Black	B, C, D
3	1.5	M	27.6 x 19 x 48.3	33254098	Strap/Clip	A	Black	B, C, D
4	2.8	F	30.5 x 26.1 x 31.25	33308974	Universal	A	Black	B, C, D
4	2.8	M	37.5 x 39.8 x 48.3	33308731	Panel	A	Black	B, C, D
4	2.8	M	27.6 x 27 x 48.3	33308978	Strap/Clip	A	Black	B, C, D
6	1.5	F	30.5 x 26.1 x 31.25	33308961	Universal	A	Black	B, C, D
6	1.5	M	37.5 x 39.8 x 48.3	33308982	Panel	A	Black	B, C, D
6	1.5	M	27.6 x 27 x 48.3	33308912	Strap/Clip	A	Black	B, C, D
7	1.5 (4) + 2.8 (3)	F	31.4 x 26.1 x 31.25	33285164	Universal	A	Black	B, C, D
7	1.5 (4) + 2.8 (3)	M	42.5 x 39.8 x 48.3	33285120	Panel	A	Black	B, C, D
7	1.5 (4) + 2.8 (3)	M	33.2 x 27 x 48.3	33341403	Strap/Clip	A	Black	B, C, D
8	1.5	F	31.4 x 26.1 x 31.25	33341417	Universal	A	Black	B, C, D
8	1.5	M	42.5 x 39.8 x 48.3	33341408	Panel	A	Black	B, C, D
8	1.5	M	33.2 x 27 x 48.3	33341413	Strap/Clip	A	Black	B, C, D
8	2.8	F	39.65 x 26.1 x 31.25	33343499	Universal	A	Black	B, C, D
8	2.8	M	40.6 x 27 x 48.3	35015736	Strap/Clip	A	Black	B, C, D
10	1.5 (6) + 2.8 (4)	F	39.65 x 26.1 x 31.25	33344008	Universal	A	Black	B, C, D
10	1.5 (6) + 2.8 (4)	M	50.5 x 39.8 x 48.3	33343722	Panel	A	Black	B, C, D
12	1.5	F	39.65 x 26.1 x 31.25	33340130	Universal	A	Black	B, C, D
12	1.5	M	50.5 x 39.8 x 48.3	33340243	Panel	A	Black	B, C, D
15	1.5 (9) + 2.8 (6)	F	51.5 x 26.1 x 31.25	33344005	Universal	A	Black	B, C, D
15	1.5 (9) + 2.8 (6)	M	62.5 x 39.8 x 48.3	33343701	Panel	A	Black	B, C, D
16	1.5 (12) + 2.8 (4)	F	51.5 x 26.1 x 31.25	33285172	Universal	A	Black	B, C, D
16	1.5 (12) + 2.8 (4)	M	62.5 x 39.8 x 48.3	33285171	Panel	A	Black	B, C, D
16	1.5 (12) + 2.8 (4)	M	52.6 x 27 x 48.3	33342243	Strap/Clip	A	Black	B, C, D
18	1.5	F	51.5 x 26.1 x 31.25	33342277	Universal	A	Black	B, C, D
18	1.5	M	62.5 x 39.8 x 48.3	33342293	Panel	A	Black	B, C, D
18	1.5	M	52.6 x 27 x 48.3	33342234	Strap/Clip	A	Black	B, C, D

Please, refer to the CTCS catalogue for the full part number list.

DIMENSION MEASUREMENT SAMPLE

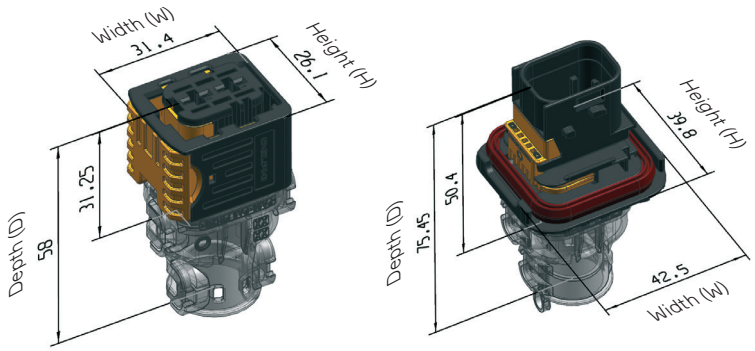

Part numbers, specifications, dimensions and performance data in this document are for general references only and are subject to change without notice. To verify product information, please contact an Aptiv representative.

APTIV

aptiv.com | © 2024 Aptiv. All rights reserved